1297-M008-0_B

LIBRAK355
LIBRAK355P
LIBRAK355S
LIBRAK355PS

INSTRUCTION MANUAL

GB TRANSLATION FROM THE ORIGINAL INSTRUCTIONS

For spare parts drawings refer to the section " LIST OF COMPONENTS" enclosed to this manual.

• For any further information please contact your local dealer or call:

BUTLER ENGINEERING and MARKETING S.p.A. a s. u.
Via dell'Ecologia, 6 - 42047 Rolo - (RE) Italy
Phone (+39) 0522 647911 - Fax (+39) 0522 649760 - e-mail: Info@butler.it

1297-M008-0_B - Rev. n. 0 (05/2014)

CONTENTS

SYMBOLS USED IN THE MANUAL AND ON THE MACHINE 5

1.0 GENERAL INTRODUCTION 7
1.1 Introduction 7

2.0 INTENDED USE 7
2.1 Staff training 7

3.0 SAFETY DEVICES 8
3.1 Residual risks 8

4.0 GENERAL SAFETY RULES 8

5.0 PACKING AND MOBILIZATION FOR TRANSPORT 9

6.0 UNPACKING 10

7.0 MOBILIZATION 10

8.0 WORKING ENVIRONMENT CONDITIONS 10
8.1 Working area 11
8.2 Lighting 11

9.0 MACHINE ASSEMBLY 11
9.1 Anchoring system 11
9.2 Fixtures contained in the packing 12
9.3 Assembly procedures 13
9.3.1 Fitting the mandrel on the flange 13
9.3.2 Fitting and removal of the pneumatic mandrel on the flange 13
9.3.3 Fitting the wheel cover 15
9.3.4 Fitting of external data gauge (standard for LIBRAK355S - LIBRAK355PS versions) (optional for LIBRAK355 - LIBRAK355P versions) 15
9.3.5 Fitting of professional external data gauge (optional) 16
9.3.6 Monitor fitting 17

10.0 ELECTRICAL CONNECTION 18
10.1 Electrical checks 19

11.0 AIR CONNECTIONS 19

12.0 FITTING THE WHEEL ON THE MANDREL 20
12.1 Fitting of the wheel (LIBRAK355 - LIBRAK355S) 20
12.2 Fitting of the wheel (LIBRAK355P - LIBRAK355PS) 21

13.0 CONTROL PANEL 23

14.0 WHEEL BALANCING 23
14.1 Switching the machine on and off 23
14.2 Balancing programs setting 24
14.2.1 Programs rapid setting and measurements through distance-diameter caliper arm 24
14.2.2 Programs setting through "Measurement being acquired" screen page 27
14.3 Indicative display of points where to detect measures/to fit weight 28
14.3.1 Weights positioning 28
14.4 Displaying the active/modifiable field 28
14.5 Wheel balancing screen page description 29
14.5.1 Balancing mode 30
14.6 Use of machines with disabled automatic gauge 32
14.6.1 Manual setting of wheel dimensions 32
14.7 Standard balancing programs 32
14.7.1 Static 32
14.7.2 Static-1 33
14.7.3 Static-2 33
14.7.4 Dynamic 33
14.7.5 ALU-S 33
14.7.6 ALU-S1 34
14.7.7 ALU-S2 34
14.7.8 ALU-1 34
14.7.9 ALU-2 34
14.7.10 ALU-3 35
14.7.11 ALU-4 35
14.8 Optional balancing programs 35
14.8.1 ECO-WEIGHT mode 35
14.8.2 SPLIT mode 37
14.8.3 Weights hidden behind spokes mode 39
14.8.4 Matching mode 40
14.9 Special balancing programs 43
14.9.1 Pax 43
14.10 Recalculation Function 43
14.11 Motorbike Mode wheel balancing 44

15.0 USER MENU (OPTIONS AND CALIBRATION) 45
15.1 Options menu 45
15.1.1 Lower weight limit 47
15.1.2 Setting adhesive weight dimensions and static threshold percentage 47
15.1.3 User management 48
15.2 Machine calibration 49
15.2.1 Mandrel "Ø" calibration 49

15.2.2 Weight measurement sensors calibration ____ *49*
15.2.3 Gauge calibration ____ *50*

16.0 ERROR SIGNALS ____ **54**

17.0 ROUTINE MAINTENANCE ____ **55**

18.0 TECHNICAL DATA ____ **56**
18.1 Dimensions ____ *57*

19.0 STORING ____ **58**

20.0 SCRAPPING ____ **58**

20.1 Instructions for the correct management of waste from electric and electronic equipment (in italian RAEE) according to legislative decree 151/05 ____ *58*

21.0 REGISTRATION PLATE DATA ____ **58**

22.0 FUNCTIONAL DIAGRAMS ____ **58**
Table A - Electrical and pneumatic connection diagram ____ *59*

23.0 LIST OF COMPONENTS

Fig. 1 - LIBRAK355 - LIBRAK355P - LIBRAK355S - LIBRAK355PS

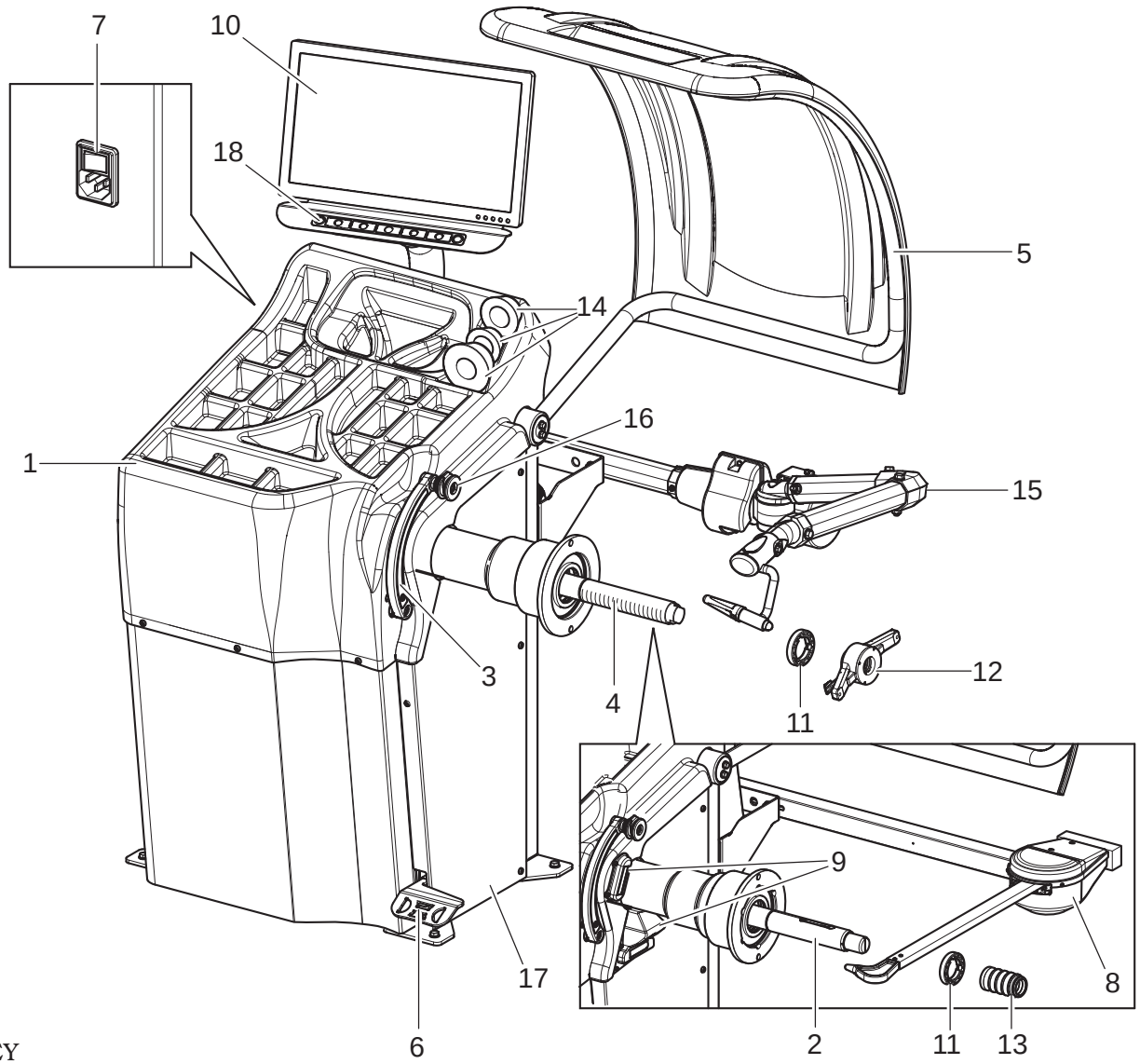

KEY
1 – Weight holding bridge
2 – Pneumatic mandrel (only for LIBRAK355P - LIBRAK355PS model)
3 – Distance-diameter caliper
4 – Threaded mandrel (only for LIBRAK355 - LIBRAK355S models)
5 – Protection guard
6 – Foot brake (only for LIBRAK355 - LIBRAK355S models) / pneumatic mandrel open-close foot brake pedal (only for LIBRAK355P - LIBRAK355PS models)
7 – Main switch
8 – External data gauge (standard for LIBRAK355S - LIBRAK355PS models) (optional for LIBRAK355 - LIBRAK355P models)
9 - Group fixed laser illuminator (standard for models LIBRAK355S - LIBRAK355PS)
10 – Monitor
11 – Pusher ring
12 – Rapid ring nut (only for LIBRAK355 - LIBRAK355S models)
13 – Locking sleeve (only for LIBRAK355P - LIBRAK355PS models)
14 – Cones
15 – Professional external data gauge (optional)
16 – Grippers for weight fitting
17 – Lateral guard
18 – Push-button panel with 7 keys

SYMBOLS USED IN THE MANUAL AND ON THE MACHINE

Symbols	Description
	Read instruction manual.
	FORBIDDEN!
2167000	Wear work gloves.
	Wear work shoes.
2167000	Wear safety goggles.
	Wear safety earcaps.
99990758	Shock hazard.
	Caution: hanging loads.
	Warning. Be particularly careful (possible material damages).

Symbols	Description
	Mandatory. Operations or jobs to be performed compulsorily.
	Danger! Be particularly careful.
	Move with fork lift truck or pallet truck.
	Lift from above.
1541000	General danger.
	Technical assistance necessary. Do not perform any intervention.
	Note. Indication and/or useful information.
999912940	Attention: never lift the machine by means of the mandrel.
99990114	Arrow plate.

INFORMATION PLATE LOCATION TABLE

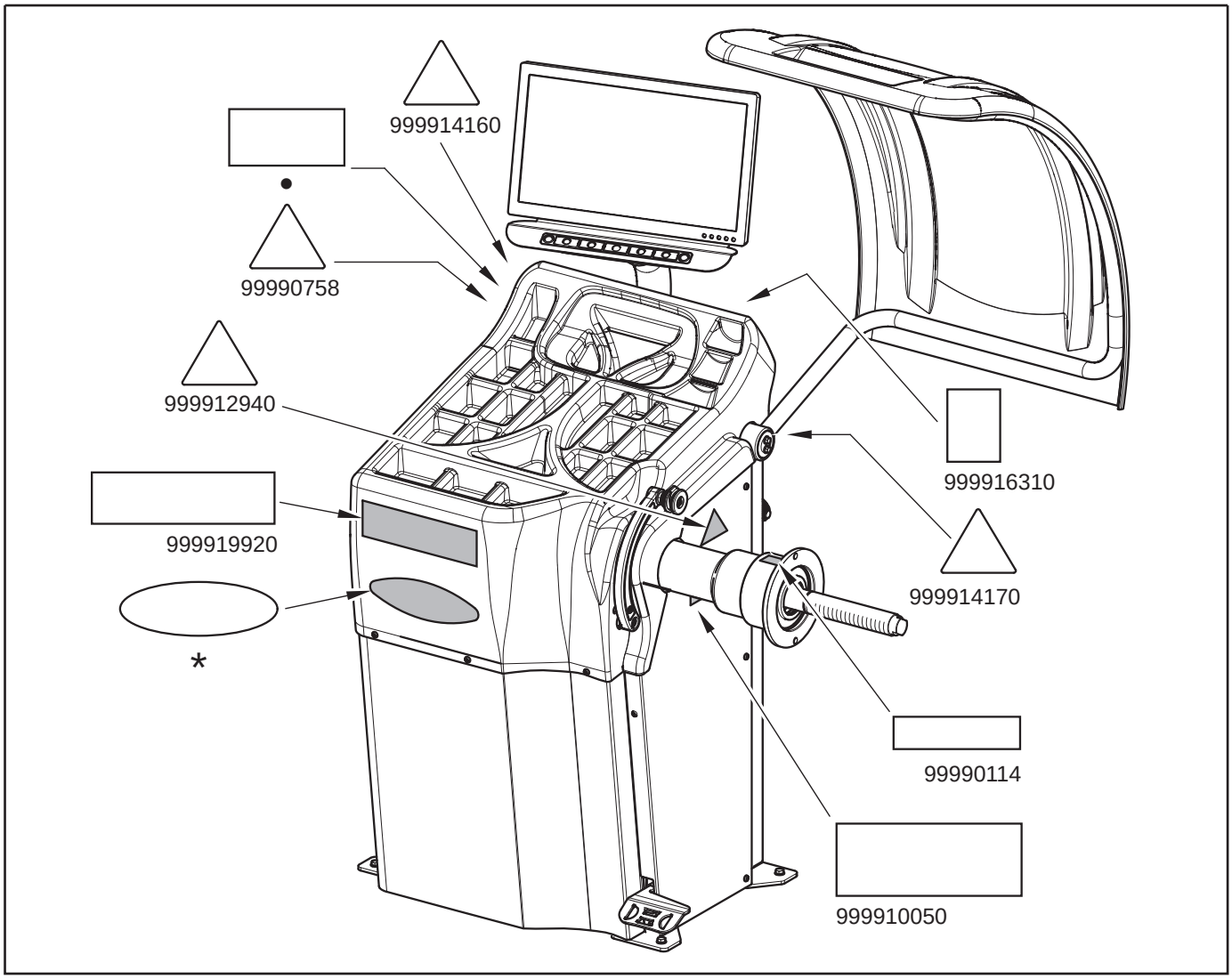

Code numbers of plates

99990114	*Arrow plate*
99990758	*Electricity danger plate*
999910050	*Protection device use plate*
999912940	*Lifting plate*
999914160	*Voltage 230V 50/60 Hz 1 Ph plate*
999914170	*Voltage 115V 50/60 Hz 1 Ph plate*
999916310	*Skip label*
999919920	*Machine nameplate*
•	*Serial number plate*
*	*Manufacturer trademark nameplate*

IF ONE OR MORE PLATES DISAPPEARS FROM THE MACHINE OR BECOMES DIFFICULT TO READ, IT MUST BE REPLACED. QUOTE THE CODE NUMBER WHEN REORDERING.

NOTE: SOME OF THE PICTURES PRESENT IN THIS MANUAL HAVE BEEN OBTAINED FROM PICTURES OF PROTOTYPES, THEREFORE THE STANDARD PRODUCTION MACHINES CAN BE DIFFERENT IN SOME COMPONENTS.

1.0 GENERAL INTRODUCTION

This manual is an integral part of the product and must be retained for the whole operating life of the machine.

Carefully study the warnings and instructions contained in this manual. It contains important instructions regarding **FUNCTIONING, SAFE USE and MAINTENANCE.**

KEEP THE MANUAL IN A KNOWN, EASILY ACCESSIBLE PLACE FOR ALL OPERATORS TO CONSULT IT WHENEVER IN DOUBT.

THE MANUFACTURER DISCLAIMS ALL RESPONSIBILITY FOR ANY DAMAGE OCCURRED WHEN THE INDICATIONS GIVEN IN THIS MANUAL ARE NOT RESPECTED: AS A MATTER OF FACT, THE NON-COMPLIANCE WITH SUCH INDICATIONS MIGHT LEAD TO EVEN SERIOUS DANGERS.

1.1 Introduction

Thank you for preferring this wheel balancer. We feel sure you will not regret your decision.

This machine has been designed for use in professional workshops and stands out for its reliability and easy, safe and rapid operation. With just a small degree of maintenance and care, this wheel balancer will give you many years of trouble-free service and lots of satisfaction.

2.0 INTENDED USE

The models **LIBRAK355 - LIBRAK355P - LIBRAK355S - LIBRAK355PS**MACHINES, and relative versions, are wheels balancing machines for car and light transport, projected to be used exclusively to cancel out, or at least reduce to acceptable limits the vibrations of the wheels, by fitting counterweights of suitable size and in specific positions to the same wheels that are not correctly balanced.

DANGER: THIS MACHINE MUST BE USED STRICTLY FOR THE INTENDED PURPOSE IT WAS DESIGNED FOR (AS INDICATED IN THIS MANUAL).

THE MANUFACTURER CANNOT BE HELD RESPONSIBLE FOR ANY DAMAGE CAUSED BY IMPROPER, ERRONEOUS, OR UNACCEPTABLE USE.

AN INTENSIVE USE OF THE EQUIPMENT IN INDUSTRIAL ENVIRONMENT IS NOT RECOMMENDED.

2.1 Staff training

The machine may be operated only by suitably trained and authorized personnel.

Given the complexity of the operations necessary to manage the machine and carry out the operations safely and efficiently, the personnel must be trained in such a way that they learn all the information necessary to operate the machine as intended by the manufacturer.

A CAREFUL READING OF THIS INSTRUCTION MANUAL FOR USE AND MAINTENANCE AND A SHORT PERIOD OF TRAINING WITH SKILLED PERSONNEL CAN BE AN ENOUGH PREVENTIVE PREPARATION.

3.0 SAFETY DEVICES

- **Master switch positioned on the rear of the machine**

  Its function is to disconnect machine electric supply.
- **Protection guard**

  Its function is to protect the operator from possible projections of materials on the wheel during its spin. Wheel spinning is normally prevented if the wheel protection guard is raised (open). When the protection guard is open, this interrupts the circuit that triggers the motor and automatic start is prevented, including in the case of an error. Press stop key to stop wheel rotation in emergency conditions.

3.1 Residual risks

The machine was subjected to a complete analysis of risks according to reference standard EN ISO 12100. Risks are as reduced as possible in relation with technology and product functionality.
Possible residual risks have been emphasized through pictorial representations and warnings which placing is indicated in " PLATE POSITIONING TABLE" at page 6.

4.0 GENERAL SAFETY RULES

- Any tampering with or modification to the machine not previously authorized by the manufacturer exempts the latter from all responsibility for damage caused by or derived from said actions.
- Removing of or tampering with the safety devices or with the warning signals placed on the machine leads to serious dangers and represents a transgression of European safety rules.
- Use of the machine is only permitted in places free from **explosion** or **fire** hazard and in **dry places under cover**.
- Original spare parts and accessories should be used.

THE MANUFACTURER DENIES ANY RESPONSIBILITY IN CASE OF DAMAGES CAUSED BY UNAUTHORIZED MODIFICATIONS OR BY THE USE OF NON ORIGINAL COMPONENTS OR EQUIPMENT.

- Installation must be conducted only by qualified personnel exactly according to the instructions that are given below.
- Ensure that there are no dangerous situations during the machine operating manoeuvres. Immediately stop the machine if it miss-functions and contact the assistance service of an authorized dealer.
- In emergency situations and before carrying out any maintenance or repairs, disconnect all supplies to the machine by using the main switch, placed on the machine itself, and unplugging the power supply.
- The machine electrical supply system must be equipped with an appropriate earthing, to which the yellow-green machine protection wire must be connected.
- Ensure that the work area around the machine is free of potentially dangerous objects and that there is no oil since this could damage the tyres. Oil on the floor is also a potential danger for the operator.
- UNDER NO CIRCUMSTANCES must the machine be used to spin anything but vehicle wheels. Bad locking can cause rotating parts to come loose, with potential damage to the machine and anything in the vicinity and injury to the operator.

OPERATORS MUST WEAR SUITABLE WORK CLOTHES, PROTECTIVE GLASSES AND GLOVES, AGAINST THE DANGER FROM THE SPRAYING OF DANGEROUS DUST, AND POSSIBLY LOWER BACK SUPPORTS FOR THE LIFTING OF HEAVY PARTS. DANGLING OBJECTS LIKE BRACELETS MUST NOT BE WORN, AND LONG HAIR MUST BE TIED UP. FOOTWEAR SHOULD BE ADEQUATE FOR THE TYPE OF OPERATIONS TO BE CARRIED OUT.

- The machine handles and operating grips must be kept clean and free from oil.
- The workshop must be kept clean and dry. Make sure that the working premises are properly lit.
  The machine can be operated by a single operator. Unauthorized personnel must remain outside the working area, as shown in **Fig. 3.**
  Avoid any hazardous situations. Do not use air-operated or electrical equipment when the shop is damp or the floor slippery and do not expose such tools to atmospheric agents.
- When operating and servicing this machine, carefully follow all applicable safety and accident-prevention precautions.
  The machine must not be operated by professionally unskilled persons.

WHEN USING THE MODELS WITH WHEEL PNEUMATIC CLAMPING, DURING MANDREL OPENING/CLOSING OPERATIONS, BE EXTREMELY CAREFUL AND KEEP YOUR HANDS OR OTHER PARTS OF YOUR BODY AWAY FROM THE MOVING MANDREL.

5.0 PACKING AND MOBILIZATION FOR TRANSPORT

HAVE THE MACHINE HANDLED BY SKILLED PERSONNEL ONLY.
THE LIFTING EQUIPMENT MUST WITHSTAND A MINIMUM RATED LOAD EQUAL TO THE WEIGHT OF THE PACKED MACHINE (SEE PARAGRAPH TECHNICAL SPECIFICATIONS).

The machine is packed completely assembled. The machine is inside a carton box which size is mm 1050x750x1250.
Movement must be by pallet-lift or fork-lift trolley.
The fork lifting points are indicated on the packing.

Fig. 2

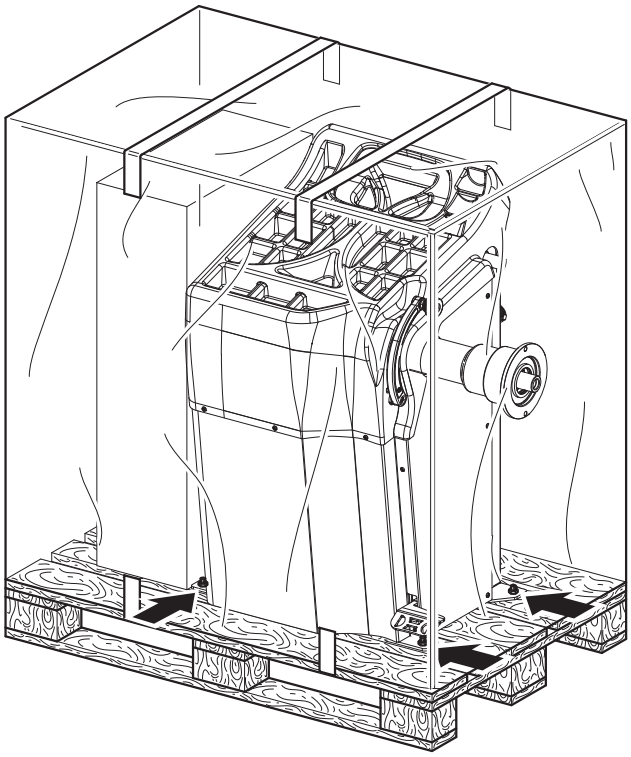

6.0 UNPACKING

DURING UNPACKING, ALWAYS WEAR GLOVES TO PREVENT ANY INJURY CAUSED BY CONTACT WITH PACKAGING MATERIAL (NAILS, ETC.).

The cardboard box is supported with plastic strapping. Cut the strapping with suitable scissors. Use a small knife to cut along the lateral axis of the box and open it like a fan.
It is also possible to unnail the cardboard box from the pallet it is fixed to. After removing the packing, and in the case of the machine packed fully assembled, check that the machine is complete and that there is no visible damage.
If in doubt **do not use the machine** and refer to professionally qualified personnel (to the seller).
The packing (plastic bags, expanded polystyrene, nails, screws, timber, etc.) should not be left within reach of children since it is potentially dangerous. These materials should be deposited in the relevant collection points if they are pollutants or non biodegradable.

THE BOX CONTAINING THE FIXTURES IS CONTAINED IN THE WRAPPING. DO NOT THROW IT AWAY WITH THE PACKING.

7.0 MOBILIZATION

THE LIFTING EQUIPMENT MUST WITHSTAND A MINIMUM RATED LOAD EQUAL TO THE WEIGHT OF THE MACHINE (SEE PARAGRAPH TECHNICAL SPECIFICATIONS). DO NOT ALLOW THE LIFTED MACHINE TO SWING.

NEVER LIFT THE MACHINE BY MEANS OF THE MANDREL.

If the machine has to be moved from its normal work post, the movement must be conducted following the instructions listed below.

- Protect the exposed corners with suitable material (Pluribol/cardboard).
- Do not use metallic cables for lifting.
- Make sure the electrical supply (and, for LIBRAK355P and LIBRAK355PS models, the pneumatic supply) of the machine is not connected.
- Place again the machine onto the original pallet with whom it was delivered.
- Use transpallet or fork-lift for handling.

8.0 WORKING ENVIRONMENT CONDITIONS

The machine must be operated under proper conditions as follows:

- temperature: 0° + 45° C
- relative humidity: 30 - 90% (dew-free)
- atmospheric pressure: 860 - 1060 hPa (mbar).

The use of the machine in ambient conditions other than those specified above is only allowed after prior agreement with and approval of the manufacturer.

8.1 Working area

Fig. 3

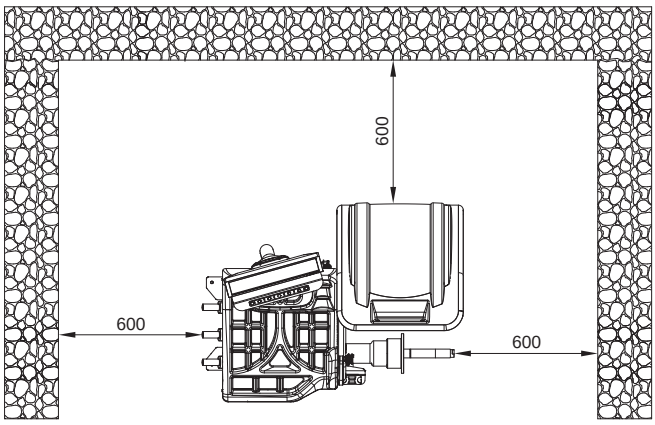

USE THE MACHINE INDOORS OR IN A ROOFED AREA. PLACE OF INSTALLATION MUST BE DRY, ADEQUATELY LIT AND IN COMPLIANCE WITH APPLICABLE SAFETY REGULATIONS.

The location of the machine requires a usable space as indicated in **Fig. 3**. The positioning of the machine must be according to the distances shown. From the control position the operator is able to observe all the machine and surrounding area. He must prevent unauthorized personnel or objects that could be dangerous from entering the area.
The machine must be fixed on a flat floor surface, preferably of cement or tiled. Avoid yielding or irregular surfaces.
The base floor must be able to support the loads transmitted during operation.
This surface must have a strength of at least 500 kg/m².
The depth of the solid floor must be sufficient to guarantee that the anchoring bolts hold.

8.2 Lighting

The machine does not require its own lighting for normal working operations. However, it must be used in an adequately lit environment.
In case of poor lighting use lamps having total power 800/1200 Watt.

IF IT IS INSTALLED, EACH TIME THE ROD OF THE DATA GAUGE IS EXTRACTED FROM ITS HOUSING, THE LIGHT (FIG. 1 REF. 9) TURNS ON MAKING THE INSIDE OF THE WHEEL WHERE THE OPERATOR MUST WORK BRIGHTER.

9.0 MACHINE ASSEMBLY

After having freed the various components from the packing check that they are complete, and that there are no anomalies, then comply with the following instructions for the assembly of the components making use of the attached series of illustrations.

9.1 Anchoring system

The packed machine is fixed to a pallet by support feet. Such feet also fix the machine to the ground through anchor small blocks as shown in **Fig. 4 ref. 1**.

IN CASE OF WHEEL WEIGHING MORE THAN 30 KG, IT IS COMPULSORY TO FIX TO THE GROUND BY MEANS OF SCREW ANCHORS.

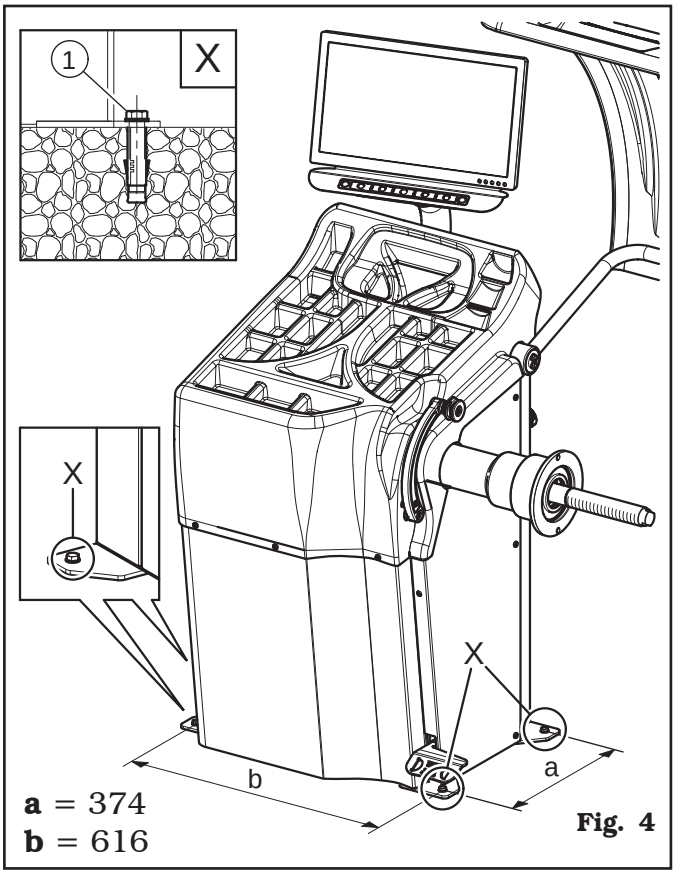

Fig. 4

The holes in the solid floor must be about 10 cm deep with a diameter of 8 MA.
The bolts (**Fig. 4 ref. 1**) must be inserted in the pre-arranged holes and fully tightened (tightening torque: about 22 Nm) until reaching the system full seal.

9.2 Fixtures contained in the packing

The packing case contains also the fixtures box.
Check that all the parts listed below are there (see **Fig. 5**).

For **LIBRAK355** model

Code	Description	N.
GAR101	*Rapid ring nut + pusher ring*	**1**
GAR111	*Cones + protection cup*	**1**
129571492	*Data gauge*	**1**
1300A004	*Weight pliers*	**1**
999072	*Carriages counterweight*	**1**

For **LIBRAK355P** model

Code	Description	N.
GAR108	*Sleeve + pusher ring*	**1**
GAR111	*Cones + protection cup*	**1**
129571492	*Data gauge*	**1**
999072	*Carriages counterweight*	**1**
1300A004	*Weight pliers*	**1**

For **LIBRAK355S** model

Code	Description	N.
GAR101	*Rapid ring nut + pusher ring*	**1**
GAR111	*Cones + protection cup*	**1**
129571492	*Gauge*	**1**
999072	*Carriages counterweight*	**1**
1300A004	*Weight pliers*	**1**
129590720	*External data gauge*	**1**

For **LIBRAK355PS** model

Code	Description	N.
GAR108	*Sleeve + pusher ring*	**1**
GAR111	*Cones + protection cup*	**1**
129571492	*Gauge*	**1**
999072	*Carriages counterweight*	**1**
1300A004	*Weight pliers*	**1**
129590720	*External data gauge*	**1**

Fig. 5

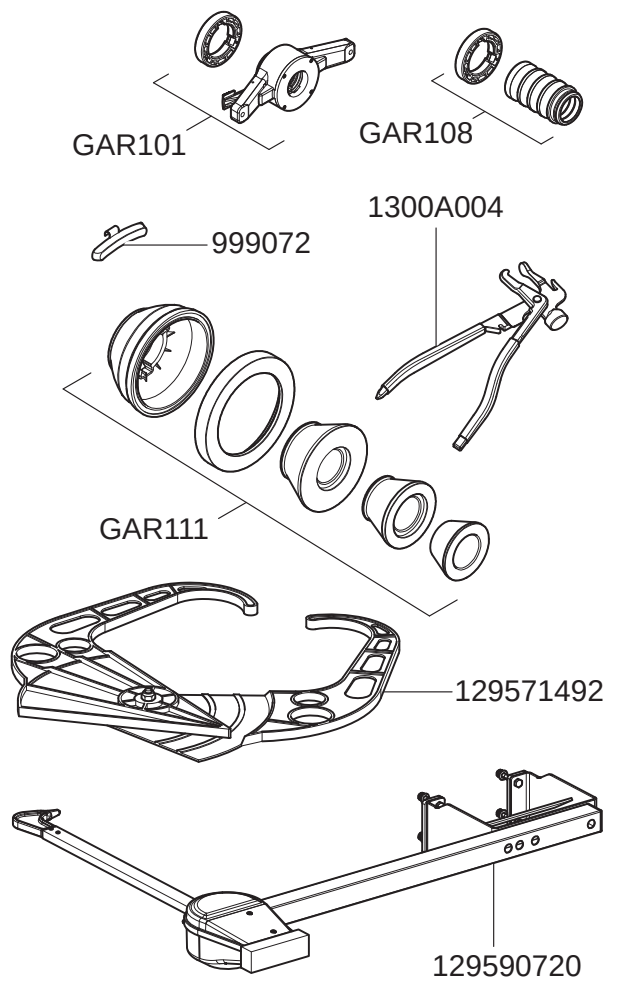

9.3 Assembly procedures

9.3.1 Fitting the mandrel on the flange

Only for LIBRAK355 - LIBRAK355S models

Screw the mandrel with an Allen wrench (**Fig. 6 ref. 1**) on the flange (**Fig. 6 ref. 2**).

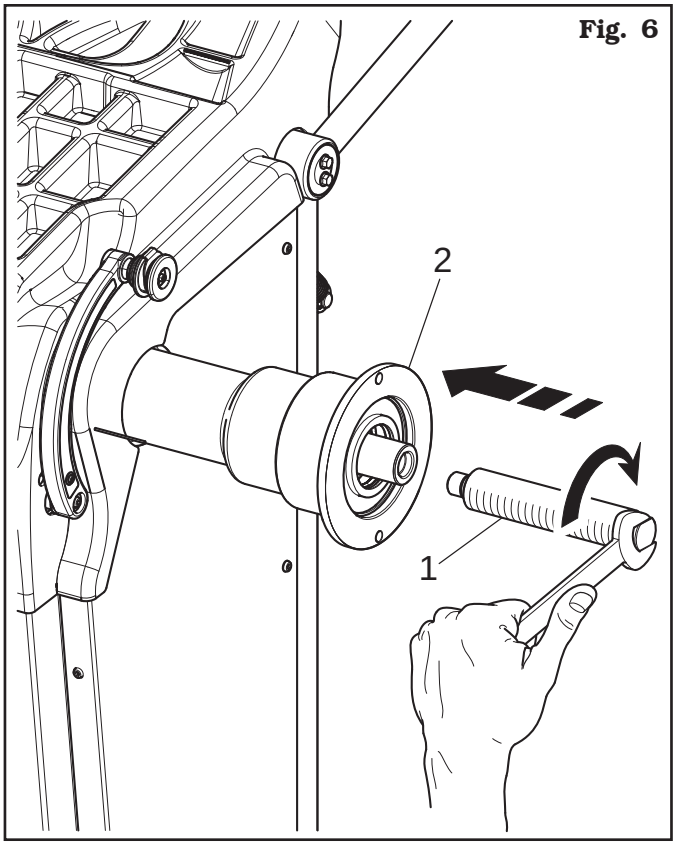

Fig. 6

9.3.2 Fitting and removal of the pneumatic mandrel on the flange

Only for LIBRAK355P - LIBRAK355PS model

FITTING

1. After making power and air connections switch on the machine (the pneumatic mandrel always opens when the machine is switched on). Switch the machine off. Fit the internal mandrel on the flange and tighten it with the wrench provided (**Fig. 7** and **Fig. 8**).

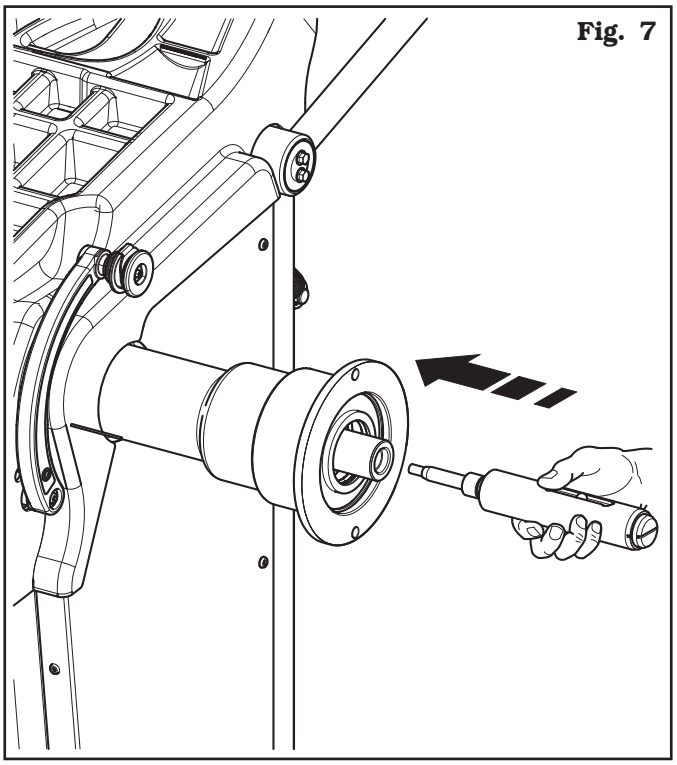
Fig. 7

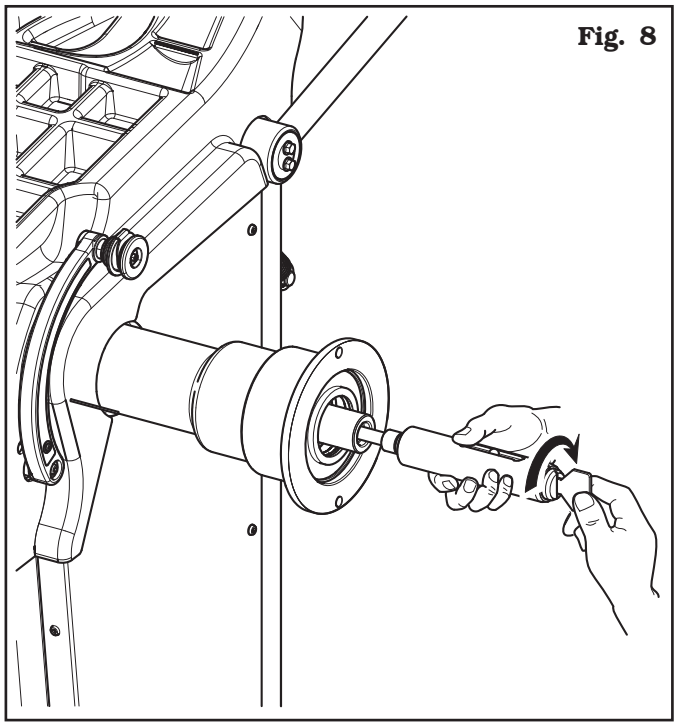
Fig. 8

2. Press the brake's pedal and, at the same time, tighten the internal mandrel as far as it will go using the wrench provided (**Fig. 9**).

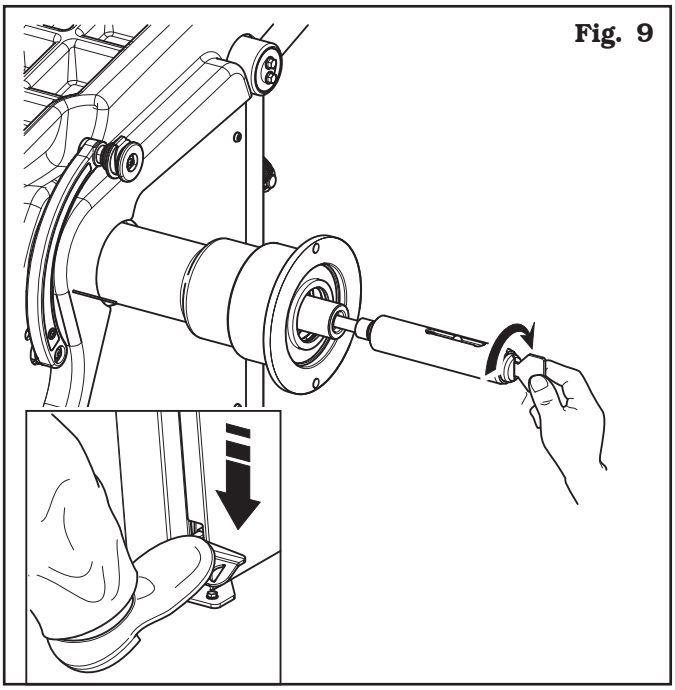
Fig. 9

3. Fit the external mandrel and tighten it manually (**Fig. 10**).

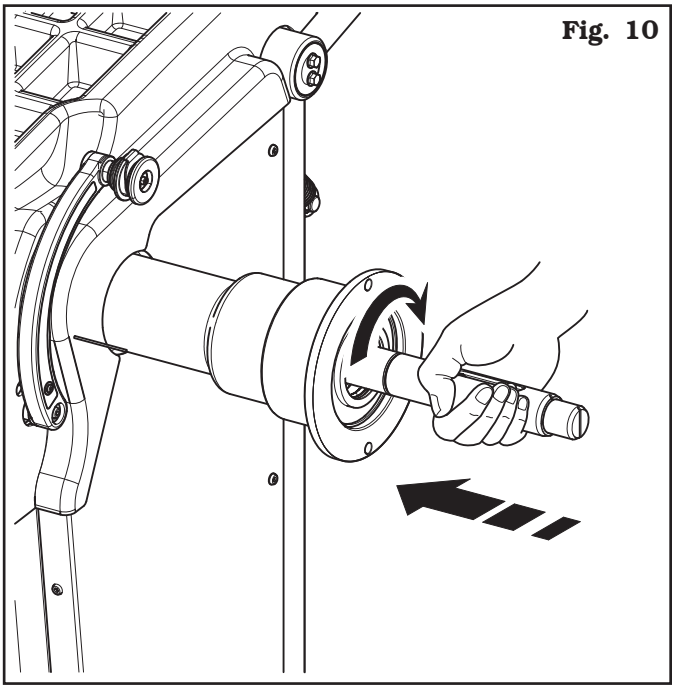
Fig. 10

4. Close the pneumatic mandrel by means of the pedal to access the key socket (Fig.(**Fig. 11**).

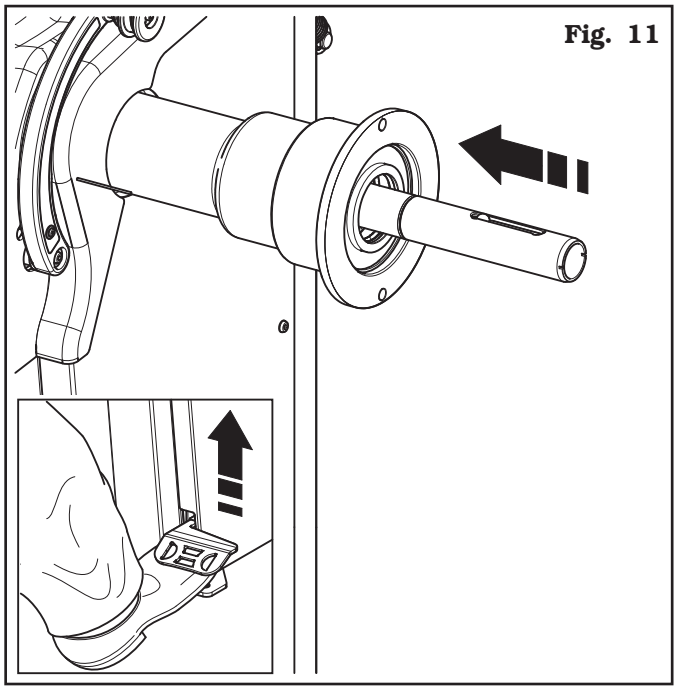
Fig. 11

5. Press the brake pedal and at the same time block the external mandrel using the wrench supplied (**Fig. 12**).

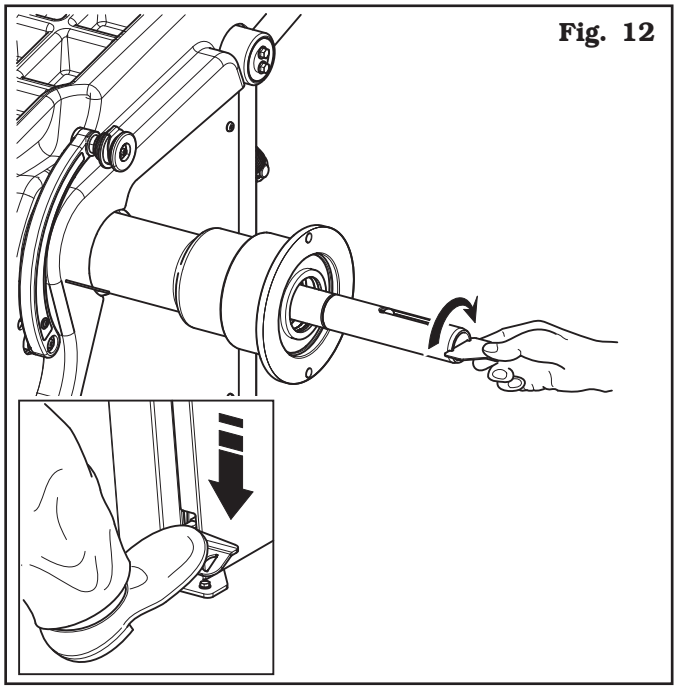
Fig. 12

REMOVAL

- Close the pneumatic mandrel by means of the pedal to access the key socket (**Fig. 11**).
- Press the brake pedal and at the same time release the external mandrel by using the wrench provided (**Fig. 12**).
- Remove the external mandrel, open the pneumatic mandrel by means of the pedal provided and loosen the internal mandrel using the special wrench (**Fig. 9**).

9.3.3 Fitting the wheel cover

1. Mount the protection guard (**Fig. 13 ref. 1**) to the support (**Fig. 13 ref. 2**) using the screws (**Fig. 13 ref. 3**), interposing the Belleville washers (**Fig. 13 ref. 4**).
2. Tighten the screws (**Fig. 13 ref. 3**) in order to make the guard (**Fig. 13 ref. 1**) lift or lower without bumping against the limit switch. Carry out the adjustment so that it's possible to manually guide the guard both during closing and opening.

DURING GUARD'S ASSEMBLY, PAY ATTENTION TO THE MICRO PLACED INSIDE THE MACHINE.

Fig. 13

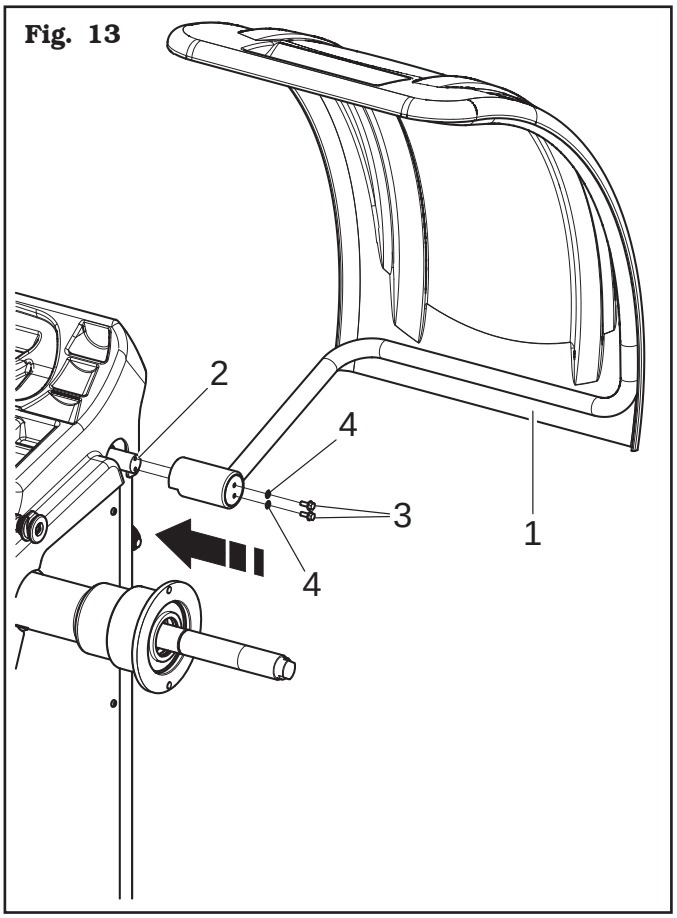

9.3.4 Fitting of external data gauge (standard for LIBRAK355S - LIBRAK355PS versions) (optional for LIBRAK355 - LIBRAK355P versions)

1. Remove the bridge from the machine.
2. Screw the 4 screws (**Fig. 14 ref. 1**) to the gauge bracket (**Fig. 14 ref. 2**) and the special inserts placed on the rear side of the frame, laying the spacers (**Fig. 14 ref. 3**) and securing everything with the nuts (**Fig. 14 ref. 4**).
   Lock the gauge arm (**Fig. 14 ref. 5**) by screwing the 2 screws provided (**Fig. 14 ref. 6**). Lock these screws with the nuts (**Fig. 14 ref. 7**) so that the mandrel and the gauge arm are levelled out (see **Fig. 15**).

Fig. 14

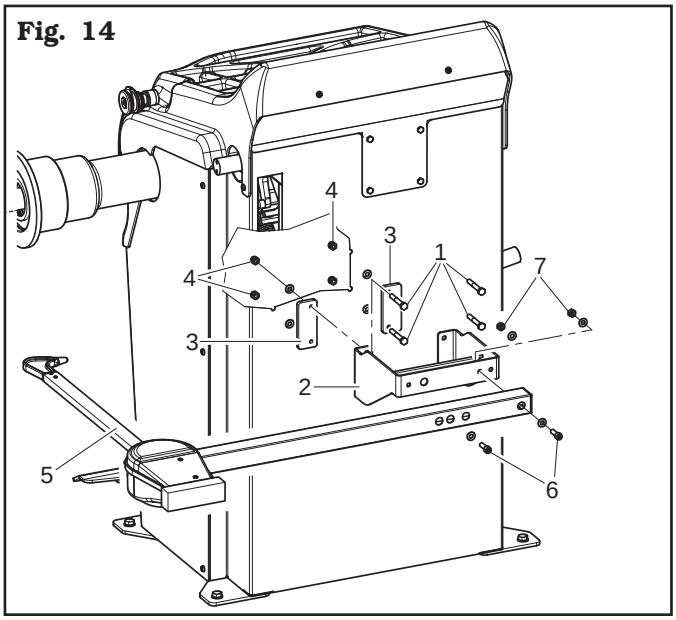

3. Make sure the gauge tip (**Fig. 15 ref. 1**) is positioned at the centre of the mandrel.

Fig. 15

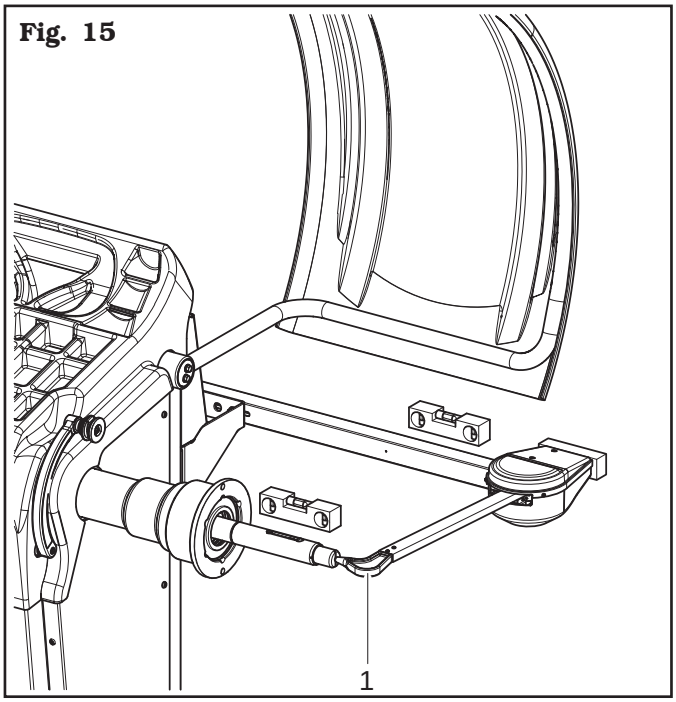

4. Connect connector (**Fig. 16 ref. 1**) of the cable coming from inside the machine to connector (**Fig. 16 ref. 2**) of the cable coming from the gauge arm. Fit the section of the cable with the connectors inside the arm (**Fig. 16 ref. 3**).
5. Fasten the cable with clamps.
6. Enable the external data gauge and carry out the device's calibration.

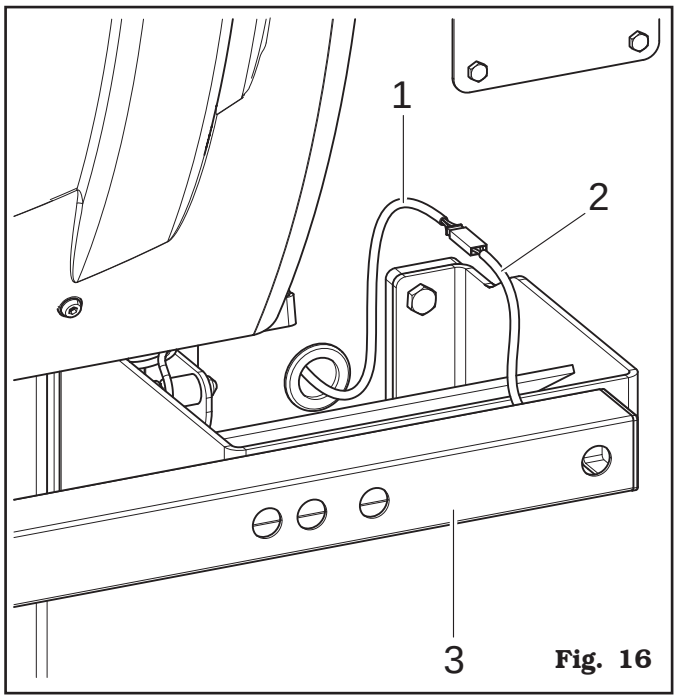

Fig. 16

7. Fit machine's bridge again.

9.3.5 Fitting of professional external data gauge (optional)

1. Remove the bridge from the machine.
2. Screw the 4 screws (**Fig. 17 ref. 1**) to the gauge bracket (**Fig. 17 ref. 2**) and the special inserts placed on the rear side of the frame, laying the spacers (**Fig. 17 ref. 3**) and securing everything with the nuts (**Fig. 17 ref. 4**).
   Lock the gauge arm (**Fig. 17 ref. 5**) by screwing the 2 screws provided (**Fig. 17 ref. 6**). Lock these screws with the nuts (**Fig. 17 ref. 7**) so that the mandrel and the gauge arm are levelled out (see **Fig. 18**).

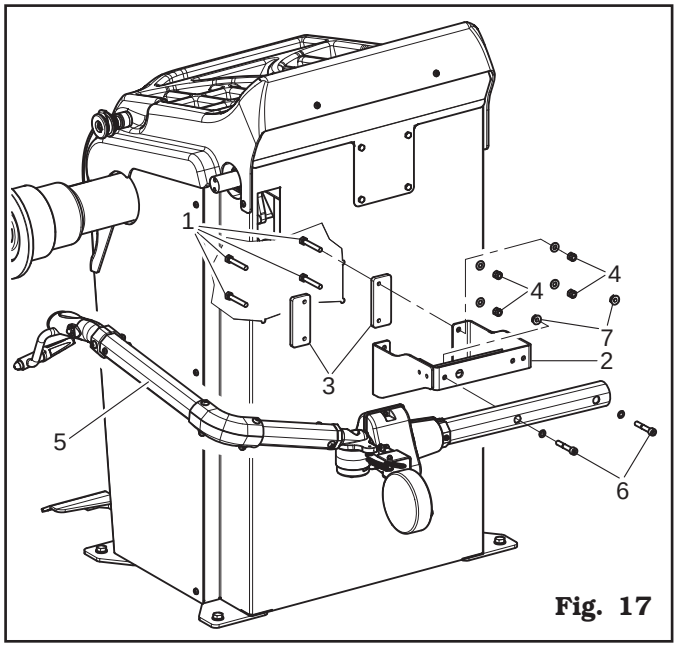

Fig. 17

3. Make sure the gauge tip (**Fig. 18 ref. 1**) is positioned at the centre of the mandrel.

Fig. 18

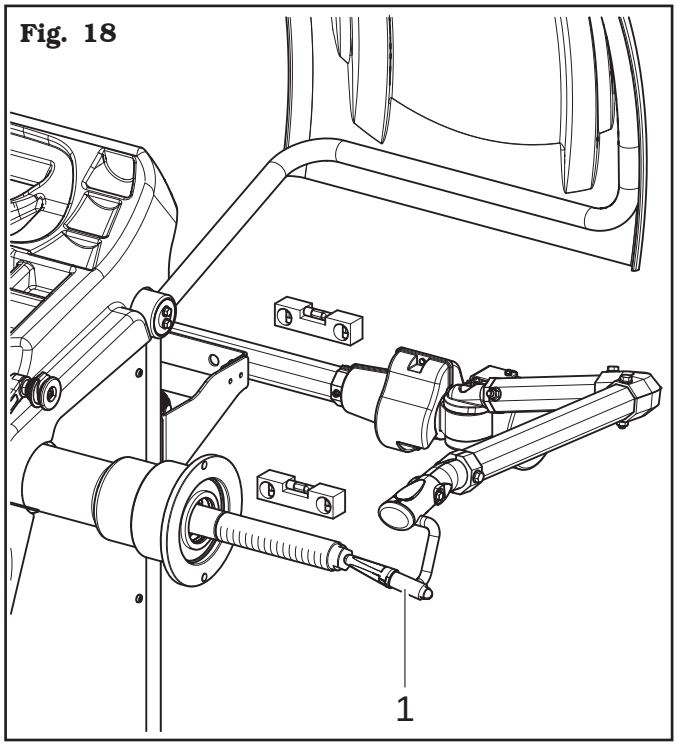

4. Connect connector (**Fig. 19 ref. 1**) of the cable coming from inside the machine to connector (**Fig. 19 ref. 2**) of the cable coming from the gauge arm. Fit the section of the cable with the connectors inside the arm (**Fig. 19 ref. 3**).
5. Fasten the cable with clamps.
6. Enable the external data gauge and carry out the device's calibration.

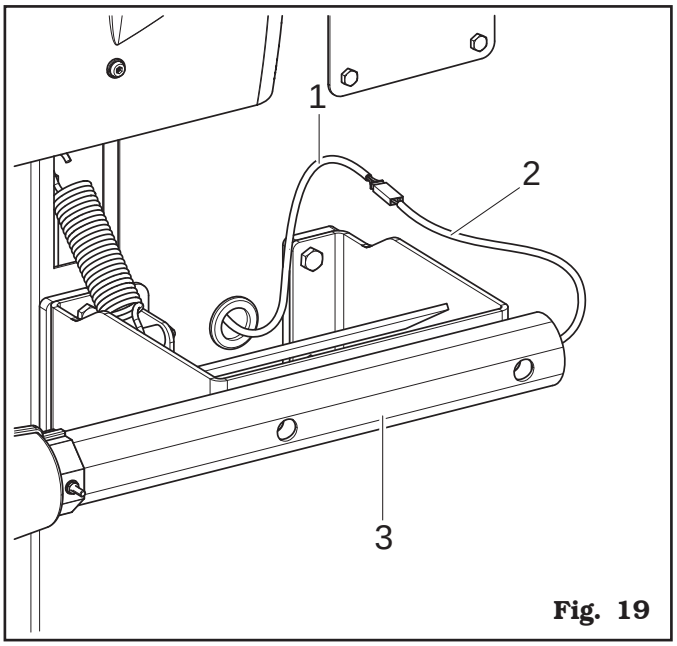

Fig. 19

7. Fit machine's bridge again.

9.3.6 Monitor fitting

1. Make the monitor cables and keyboard (**Fig. 20 ref. 3**) pass through the flange (**Fig. 20 ref. 5**) and the support tube (**Fig. 20 ref. 2**). Fix the tube to the machine screwing up the nuts (**Fig. 20 ref. 1**) to the screws (**Fig. 20 ref. 4**) laying the flange (**Fig. 20 ref. 5**).

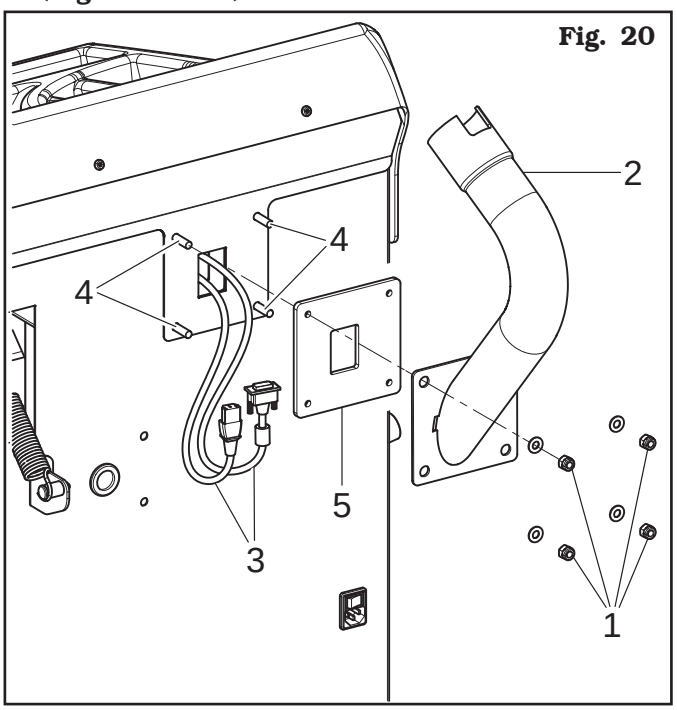

Fig. 20

2. Insert the guard (**Fig. 21 ref. 1**) into the support tube (**Fig. 21 ref. 2**). Insert the monitor support (**Fig. 21 ref. 3**) into the tube (**Fig. 21 ref. 2**) remembering to make the cables pass through its interior. Screw the grub screw (**Fig. 21 ref. 4**) and secure everything by tightening the lock nut (**Fig. 21 ref. 5**).

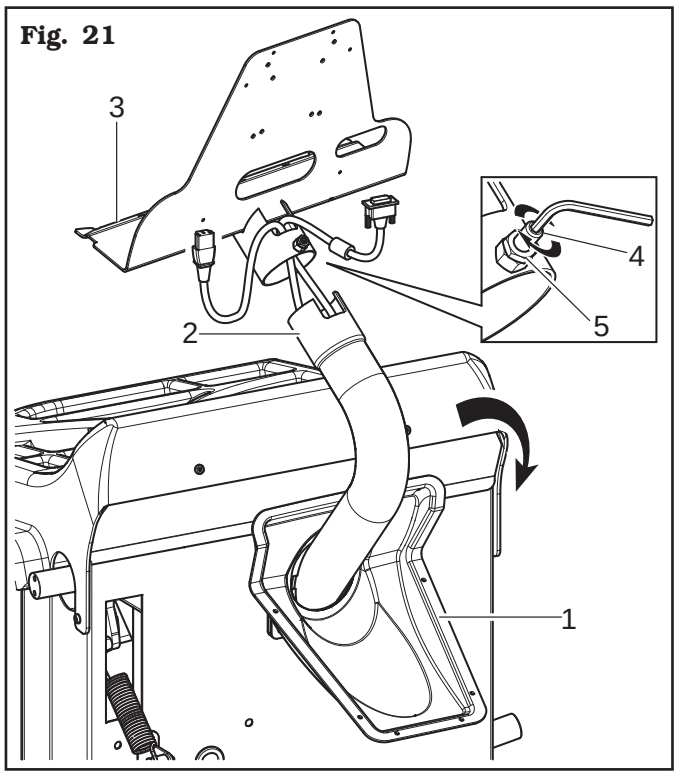

Fig. 21

3. Connect the plugs on the power supply sockets and monitor signal. Connect the wiring of the keyboard.
4. Fix the monitor (**Fig. 22 ref. 1**) and the keyboard (**Fig. 22 ref. 2**) to the support (**Fig. 22 ref. 3**) by means of the supplied screws (**Fig. 22 ref. 4**) and (**Fig. 22 ref. 5**).

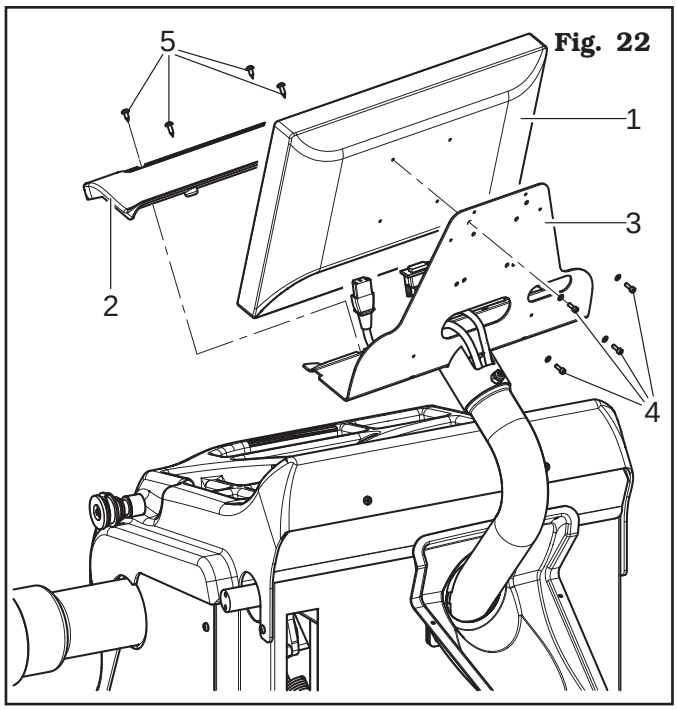

Fig. 22

5. Mount the guard (**Fig. 23 ref. 1**) to the support (**Fig. 23 ref. 2**) using the supplied 6 screws **Fig. 23 ref. 3**).

Fig. 23

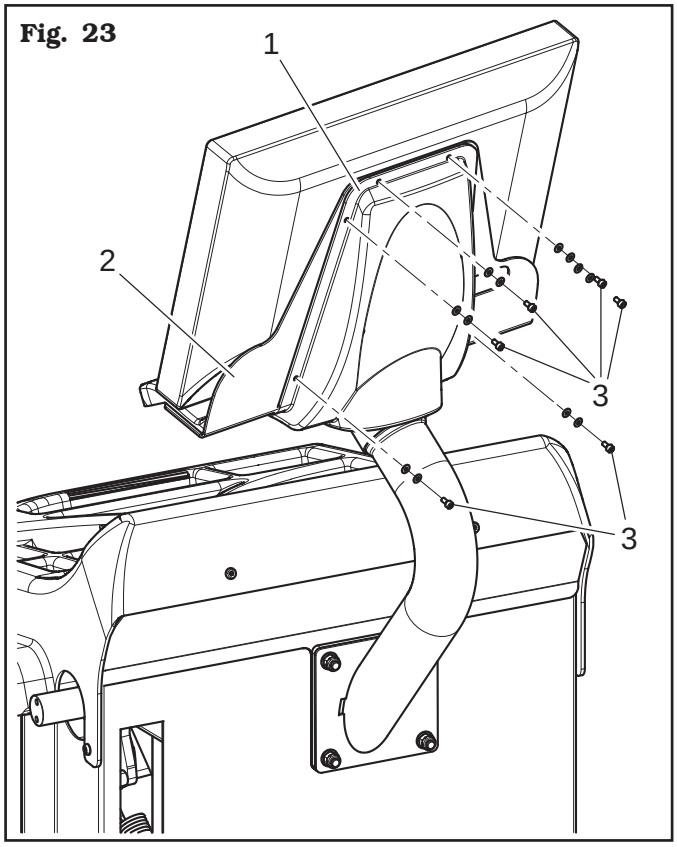

10.0 ELECTRICAL CONNECTION

EVEN THE TINIEST PROCEDURE OF AN ELECTRICAL NATURE MUST BE CARRIED OUT BY PROFESSIONALLY QUALIFIED STAFF.

BEFORE CONNECTING THE MACHINE MAKE SURE THAT:
- **THE MAIN POWER RATING CORRESPONDS TO THE MACHINE RATING AS SHOWN ON THE MACHINE PLATE;**
- **ALL MAIN POWER COMPONENTS ARE IN GOOD CONDITION;**
- **THE ELECTRICAL SYSTEM IS PROPERLY GROUNDED (GROUND WIRE MUST BE THE SAME CROSS-SECTION AREA AS THE LARGEST POWER SUPPLY CABLES OR GREATER);**
- **MAKE SURE THAT THE ELECTRICAL SYSTEM FEATURES A CUTOUT WITH DIFFERENTIAL PROTECTION SET AT 30 mA.**

Connect the machine up to the mains by means of the 3-pole plug provided (230 V single-phase) through the wall socket.
If the plug provided is not suitable for the wall socket, fit a plug that complies with local and applicable regulations. This operation must be performed by expert and professional personnel.

FIT A TYPE-APPROVED (AS REPORTED BEFORE) PLUG TO THE MACHINE CABLE (THE GROUND WIRE IS YELLOW/GREEN AND MUST NEVER BE CONNECTED TO THE PHASE LEADS). MAKE SURE THAT THE ELECTRICAL SYSTEM IS COMPATIBLE WITH THE RATED POWER ABSORPTION SPECIFIED IN THIS MANUAL AND APT TO ENSURE THAT VOLTAGE DROP UNDER FULL LOAD WILL NOT EXCEED 4% OF RATED VOLTAGE (10% UPON START-UP).

FAILURE TO OBSERVE THE ABOVE INSTRUCTIONS WILL IMMEDIATELY INVALIDATE THE WARRANTY.

10.1 Electrical checks

BEFORE STARTING UP THE WHEEL-BALANCER, BE SURE TO BECOME FAMILIAR WITH THE LOCATION AND OPERATION OF ALL CONTROLS AND CHECK THEIR PROPER OPERATION (SEE PAR. "CONTROLS").

CARRY OUT A DAILY CHECK OF MAINTAINED-TYPE CONTROLS CORRECT FUNCTIONING, BEFORE STARTING MACHINE OPERATION.

Once the plug/socket connection has been made, turn on the machine using the master switch (**Fig. 24 ref. 1**).

Fig. 24

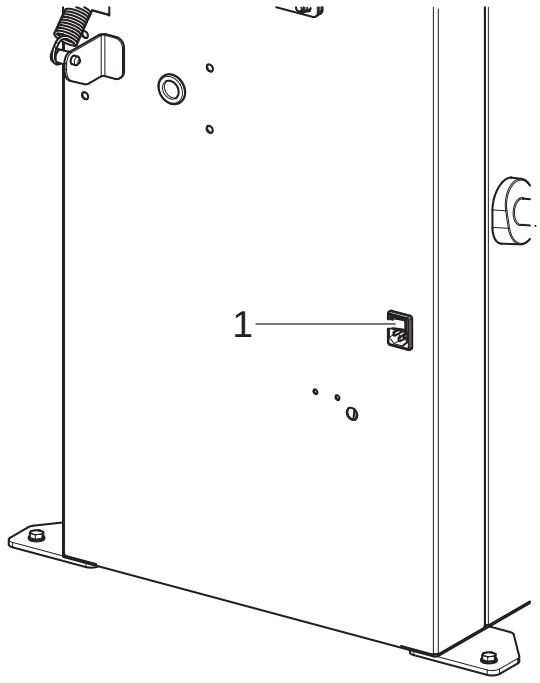

11.0 AIR CONNECTIONS

Only for LIBRAK355P - LIBRAK355PS models

IN CASE OF A CHANCE SUPPLY FAILURE, AND/OR BEFORE ANY PNEUMATIC CONNECTIONS, MOVE THE CONTROLS TO THE NEUTRAL POSITION.

Connect the wheel balancer to the centralised compressed-air system by means of the connection on the back of the machine (see **Fig. 25**).
The air system supplying the machine must be able to supply filtered and de-humidified air at a pressure between 8 and 10 bar. It must feature an on-off valve upstream of the machine.

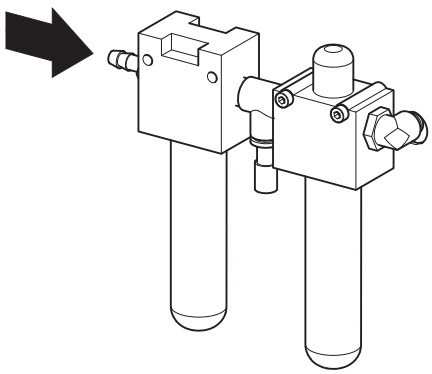

Fig. 25

12.0 FITTING THE WHEEL ON THE MANDREL

To achieve perfect balancing, the wheel must be carefully and properly fitted on the mandrel. Imperfect centring will inevitably cause unbalances.

MOST IMPORTANT IS THAT ORIGINAL CONES AND ACCESSORIES ARE USED MADE SPECIFICALLY FOR USE ON THE WHEEL BALANCER.

Wheel fitting using the cones provided is illustrated below. For alternative fittings, using optional accessories, refer to the special instructions provided separately.

12.1 Fitting of the wheel (LIBRAK355 - LIBRAK355S)

1. Remove any type of foreign body from the wheel (**Fig. 26 ref. 3**): pre-existing weights, stones and mud, and make sure the mandrel (**Fig. 26 ref. 1**) and the rim centring area are clean before fitting the wheel on the mandrel.
2. Carefully choose the cone (**Fig. 26 ref. 2**) most suitable for the wheel to be balanced. These accessories must be selected according to the shape of the rim. Position the wheel (**Fig. 26 ref. 3**), fitting the cone (**Fig. 26 ref. 2**) on the mandrel (**Fig. 26 ref. 1**): be careful (otherwise this could seize) until this rests against the support flange (**Fig. 26 ref. 4**).
3. Fit the wheel with the inner side of the rim towards the wheel balancer and against the cone.

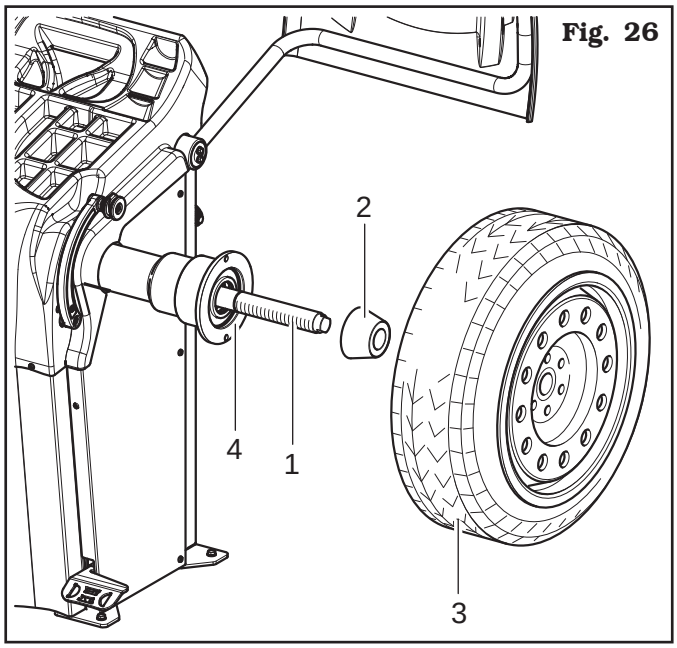

Fig. 26

4. Fit the protection cap (**Fig. 27 ref. 1**) in the locknut (**Fig. 27 ref. 2**) and fasten against the wheel.

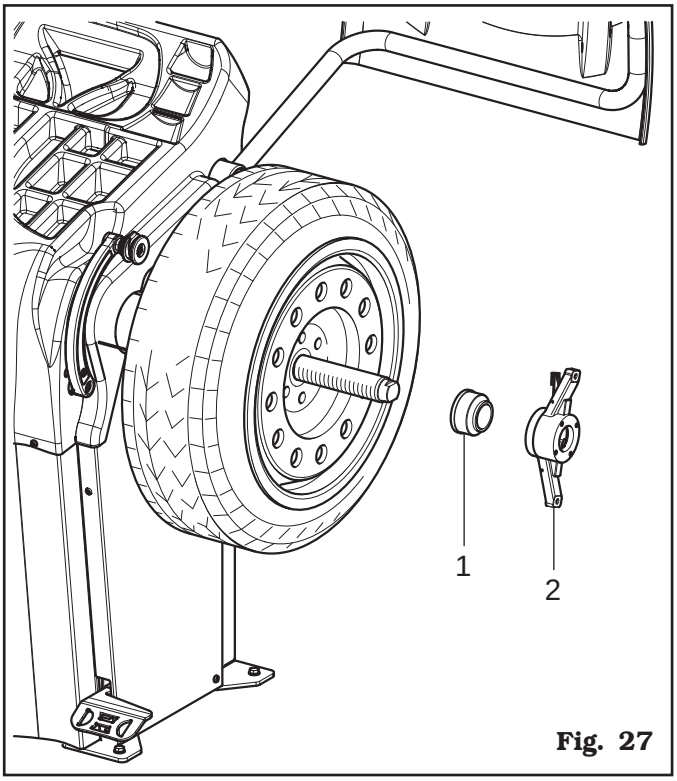

Fig. 27

Some aluminium wheels, with very high centring, must be fitted with the cone outside the wheel.

5. Clean the mandrel (**Fig. 28 ref. 1**) before fitting the wheel.
6. Fit the wheel (**Fig. 28 ref. 3**) with the inside of the rim towards the wheel balancer, until the wheel is up against the support flange (**Fig. 28 ref. 2**).

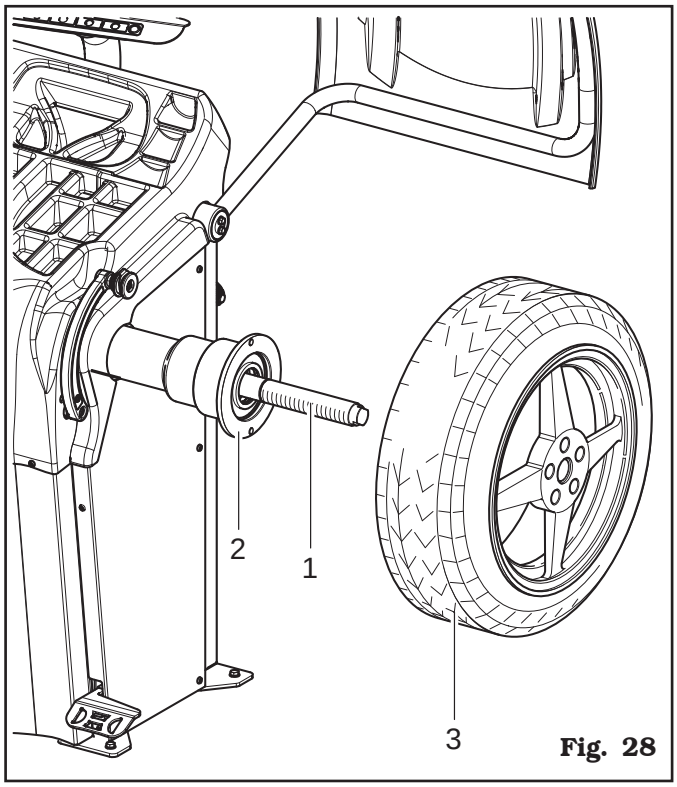

Fig. 28

7. Fit the cone (**Fig. 29 ref. 3**) with the narrowest part turned towards the wheel
8. Fit the grip-ring (**Fig. 29 ref. 1**) in the nut (**Fig. 29 ref. 2**) and fasten the cone (**Fig. 29 ref. 3**).

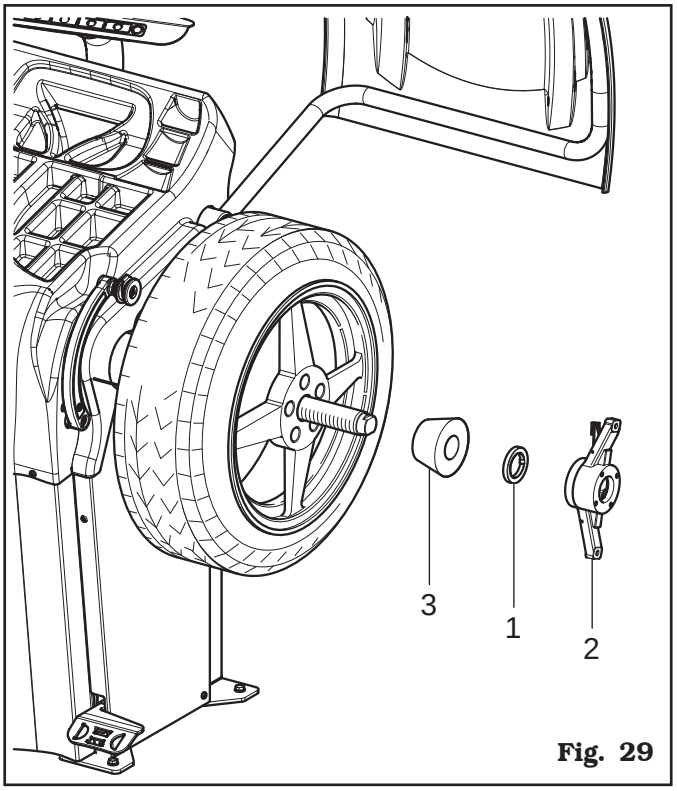

Fig. 29

12.2 Fitting of the wheel (LIBRAK355P - LIBRAK355PS)

Open the pneumatic mandrel by means of the special pedal, see **Fig. 30**.

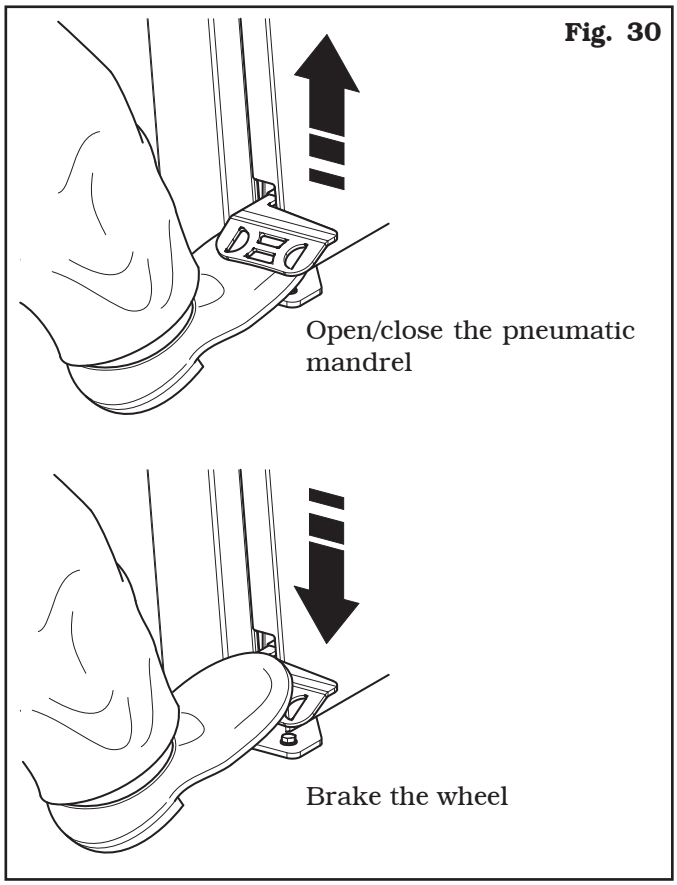

Fig. 30

1. Remove any type of foreign body from the wheel (**Fig. 31 ref. 3**): pre-existing weights, stones and mud, and make sure the mandrel (**Fig. 31 ref. 1**) and the rim centring area are clean before fitting the wheel on the mandrel.
2. Carefully choose the cone (**Fig. 31 ref. 2**) most suitable for the wheel to be balanced. These accessories must be selected according to the shape of the rim. Position the wheel (**Fig. 31 ref. 3**), fitting the cone (**Fig. 31 ref. 2**) on the mandrel (**Fig. 31 ref. 1**): be careful (otherwise this could seize) until this rests against the support flange (**Fig. 31 ref. 4**).
3. Fit the wheel with the inner side of the rim towards the wheel balancer and against the cone.

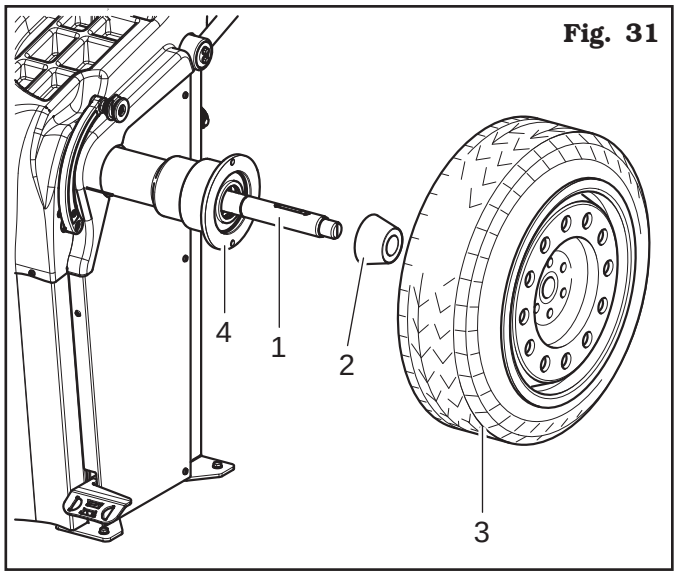

Fig. 31

4. Fit the protection cap (**Fig. 32 ref. 1**) in the bush (**Fig. 32 ref. 2**) and bring everything against the wheel.

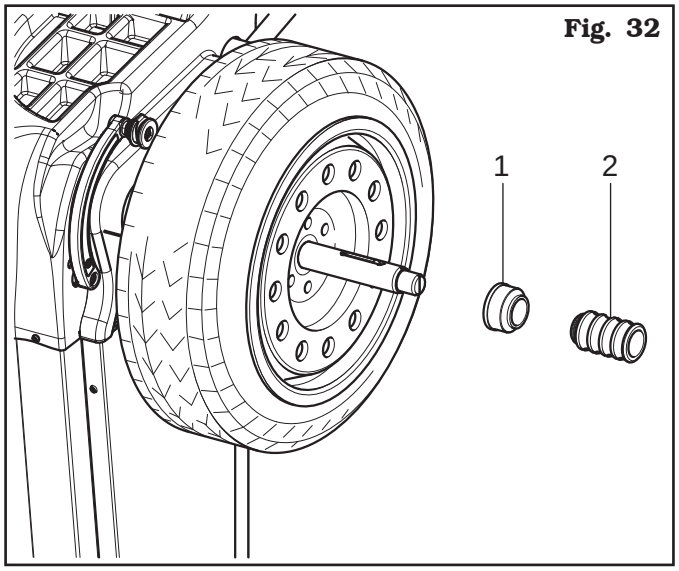

Fig. 32

Lift the control pedal to close the mandrel and then clamp the wheel.
Some aluminium wheels, with very high centring, must be fitted with the cone outside the wheel.

5. Clean the mandrel before fitting the wheel.
6. Fit the wheel (**Fig. 33 ref. 3**) with the inside of the rim towards the wheel balancer, until the wheel is up against the support flange (**Fig. 33 ref. 2**).

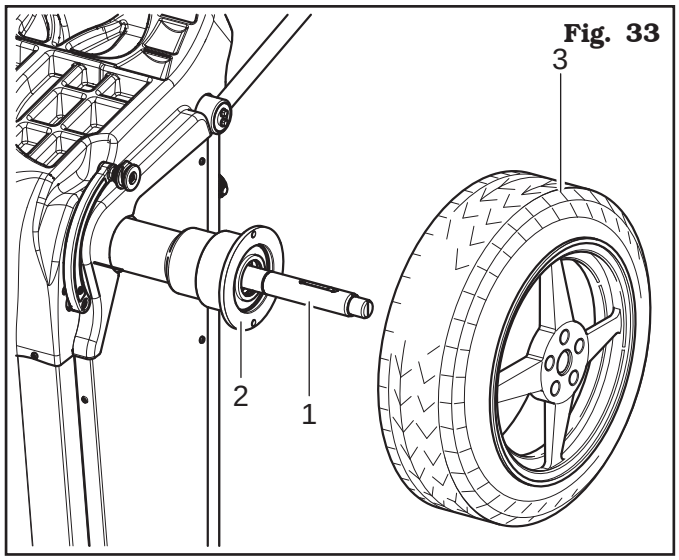

Fig. 33

7. Fit the cone (**Fig. 34 ref. 3**) with the narrowest part turned towards the wheel
8. Fit the grip-ring (**Fig. 34 ref. 1**) in the bush (**Fig. 34 ref. 2**) and bring everything against the wheel.

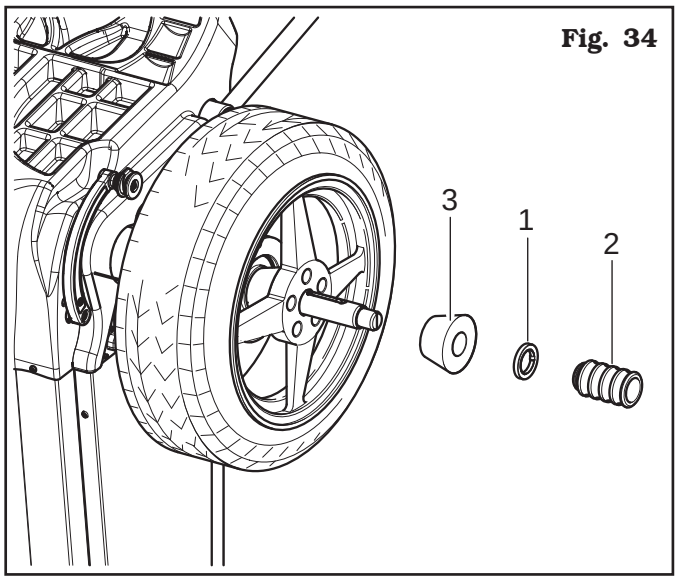

Fig. 34

Close the pneumatic mandrel by lifting the appropriate control pedal.

DURING MANDREL OPENING/ CLOSING OPERATIONS, BE CAREFUL TO KEEP YOUR HANDS AND OTHER PARTS OF THE BODY AWAY FROM THE MANDREL.

13.0 CONTROL PANEL

The wheel balancers are equipped with a control panel equipped with a keyboard to interact/operate the controls presented in graphical form on the monitor.
On the monitor are displayed all the instructions for the correct wheel balancing, for example indicating where the operator shall fit adhesive or clip weights and the balancing mode and/or option used, as well as correct wheel rotation for inner/outer weights positioning.

Fig. 35

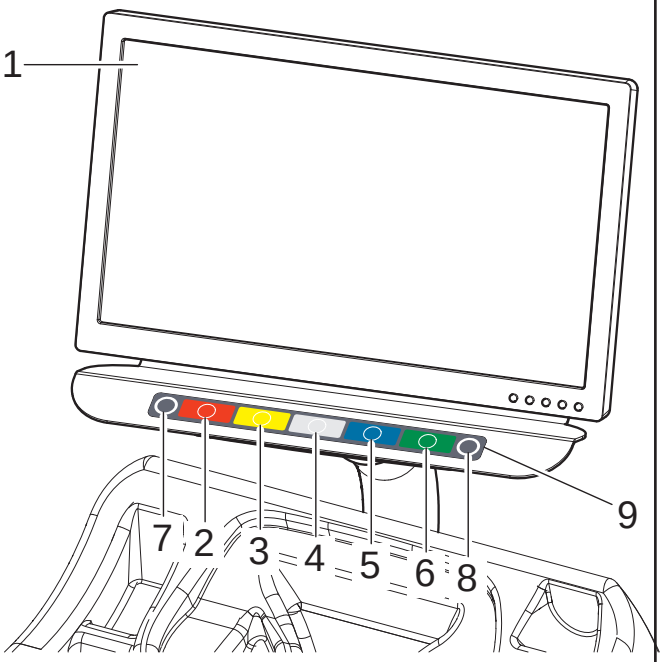

KEY
1 – Monitor
2 – Function push button (red)
3 – Function push button (yellow)
4 – Function push button (grey)
5 – Function push button (blue)
6 – Function push button (green)
7 – Previous page push button
8 – Next page/print push button
9 – Push-button panel (push-button panel with 7 keys)

14.0 WHEEL BALANCING

14.1 Switching the machine on and off

Press the "ON" switch (**Fig. 24 rif. 1**), located in the rear part of the equipment.

IN THE CASE OF PNEUMATIC MODELS, ON STARTING, THE PNEUMATIC MANDREL IS ALWAYS OPENED. ALWAYS KEEP YOUR HANDS AND OTHER PARTS OF THE BODY AWAY FROM THE MOVING MANDREL.
ALSO TAKE CARE IF A WHEEL IS ALREADY FITTED ON THE MANDREL, AS THIS COULD BE FORCED OFF THE SHAFT DURING THE OPENING OF THE MANDREL ITSELF.

Wait a few seconds until the complete loading of the operational program. The equipment is ready to operate when the main screen "Home" appears on the monitor.

Fig. 36

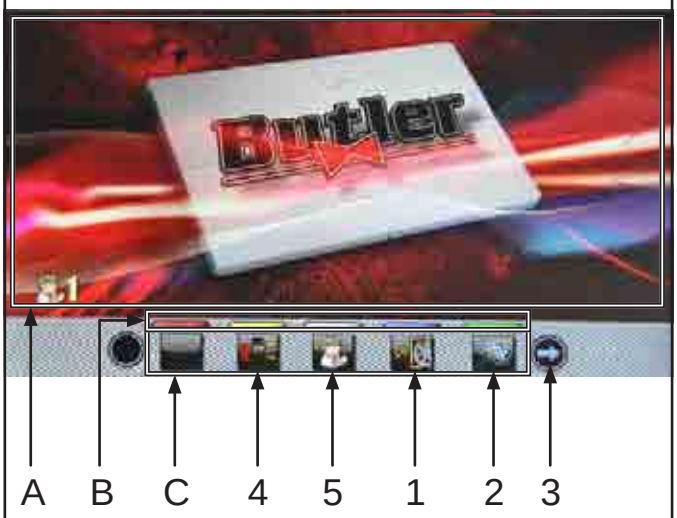

KEY
A – Displaying operations/information area
B - Colour identification buttons to use
C – Function icons
1 - Programs and measurements acquisition buttons
2 – Wheel spin push-button
3 – Go to next page
4 - Pneumatic mandrel opening/closing (only for LIBRAK355P - LIBRAK355PS models) (generally used in case of emergency)
5 – User management (if enabled) (default user management is not enabled)

At the bottom of the main screen and each screen described below, there will be coloured rectangles (**Fig. 36 ref. B**) located above the icons of identification function (**Fig. 36 ref. C**). These functions are activated by pressing the appropriate coloured button on the keypad (**Fig. 35 ref. 9**). Press the button (**Fig. 36 ref. 3**) to display a second page where you can access the "Technical assistance" menu and the "Run-out" menu (see **Fig. 37**).

Fig. 37

KEY
1 – User menu
2 – Run-out menu (visible only if the machine is fit or if the Run-out device is enabled)
3 – Return to previous page

In order to turn off the machine, simply press the "OFF" switch (**Fig. 24 ref. 1**).

WHEN THE EQUIPMENT IS TURNED OFF LOSES ALL THE MEASUREMENTS AND THE STORED DATA (SIZE, SPINS, USERS, ETC ...). AT RESTARTING, PRESSING THE BUTTON (IN THE CASE HAVE NOT YET BEEN STORED ON THE NEW MEASURES AFTER THE SWITCHING ON), THE MACHINE DOES NOT PERFORM ANY OPERATION.

14.2 Balancing programs setting

The setting of the balancing programs can be performed in two ways:

- through the gauge arm (rapid setting);
- through “Measurement being acquired” screen, appearing when the button is pressed (**Fig. 36 ref. 1**).

The setting modes are completely different even if they allow to reach the same result (but with different times).

14.2.1 Programs rapid setting and measurements through distance-diameter caliper arm

The use of the distance-diameter caliper arm allows the rapid automatic wheel balancing program and the measures entry. From page “Home”:

- bring into contact the weights fitting gripper with the inner part of the rim (1 contact only) to select the program "STATIC" (see **Fig. 38**).

Fig. 38

REPEATEDLY BRINGING THE GAUGE ARM (FIG. 39 REF. 1) IN CONTACT WITH THE SPINDLE (FIG. 39 REF. 1), THE PROGRAM WILL CYCLE FROM "STATIC" TO "STATIC 1" TO "2 STATIC" THEN RETURNING TO THE BEGINNING.

Fig. 39

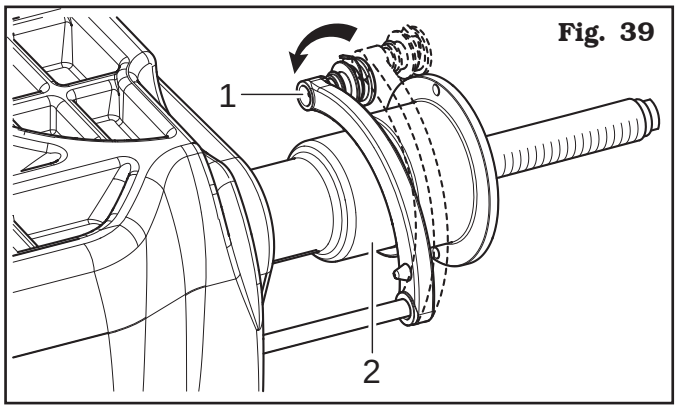

- Bring into contact the weights fitting gripper with the inner part of the rim (2 contact points) (see **Fig. 38**) to select “ALU-S” program.

REPEATEDLY BRINGING THE GAUGE ARM (FIG. 39 REF. 1) IN CONTACT WITH THE SPINDLE (FIG. 39 REF. 1), THE PROGRAM WILL CYCLE FROM "ALU-S" TO "ALU-S 1" TO "ALU-S2" THEN RETURNING TO THE BEGINNING.

WHENEVER THE DISTANCE-DIAMETER CALIPER AND/OR THE EXTERNAL DATA GAUGE (GAR307 OR GAR305, SEE FIG. 40) (IF ANY) IS KEPT IN POSITION FOR A FEW SECONDS AGAINST THE RIM (UNTIL THE MACHINE MAKES AN APPROPRIATE SOUND NOTIFICATION) , THE POSITION IS STORED AND THE VALUES MEASURED IN THE PRE-ARRANGED FIELDS IN THE SELECTED WHEEL BALANCING PROGAM ARE LOADED.

Fig. 40

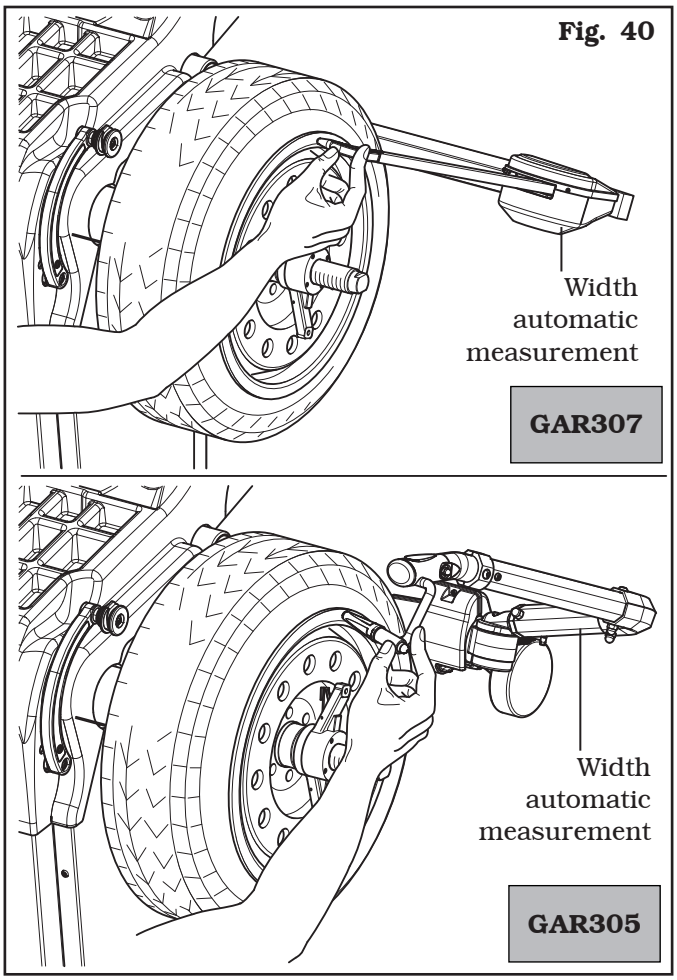

- After entering all the required measures, you can spin the wheel by pressing the button and closing the protective guard.

- **Measuring procedure of electronic RUN-OUT with the distance-diameter caliper arm.**
  The electronic RUN-OUT measuring device is useful to check if the rim has some imperfections.
  To access the screen to choose the rim control mode, proceed as follows:

- from the "Home" page, press the button

  (**Fig. 41 re. 1**) and then the button 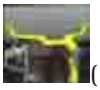 (see **Fig. 42 rif. 1**).

Fig. 41

Fig. 42

- On the monitor you will see the screen below where there are buttons to select the type of flaw detection.

Fig. 43

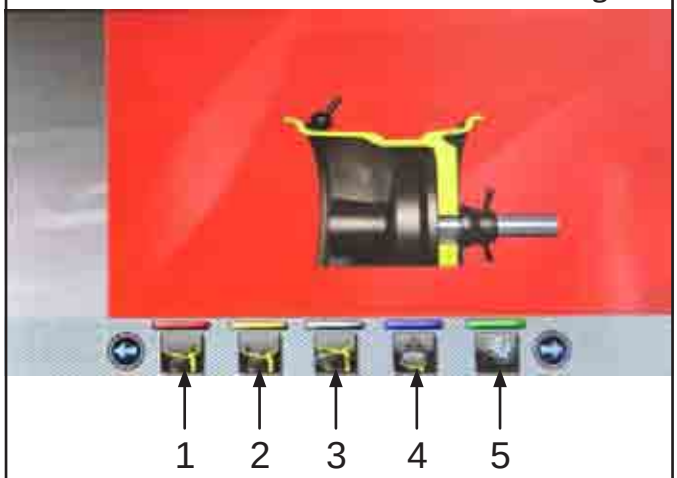

1 – Rim inner right lateral fault detection (enabled only with GAR303)
2 – Rim inner left lateral fault detection (enabled only with GAR303)
3 – Rim inner lateral fault detection
4 – Tyre fault detection (enabled only with GAR303)
5 – Wheel spin push-button

Tyre fault detection (lateral inner side).

From the screen page **Fig. 43** press the button (**Fig. 43 rif. 3**). The screen page below is displayed.

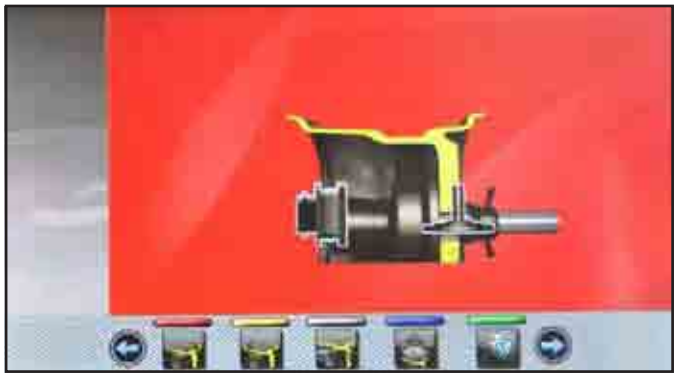

Place the distance-diameter caliper grippers (**Fig. 44 ref. 1**) on the inner side of the rim, as shown in **Fig. 44**.

Press the green button on the monitor (**Fig. 43 ref. 5**) to start the rim analysis procedure. The circle starts to spin at low speed (30 rpm) and at the end of the measurement the eccentricity graph appears, as shown in the **Fig. 45**.

Fig. 44

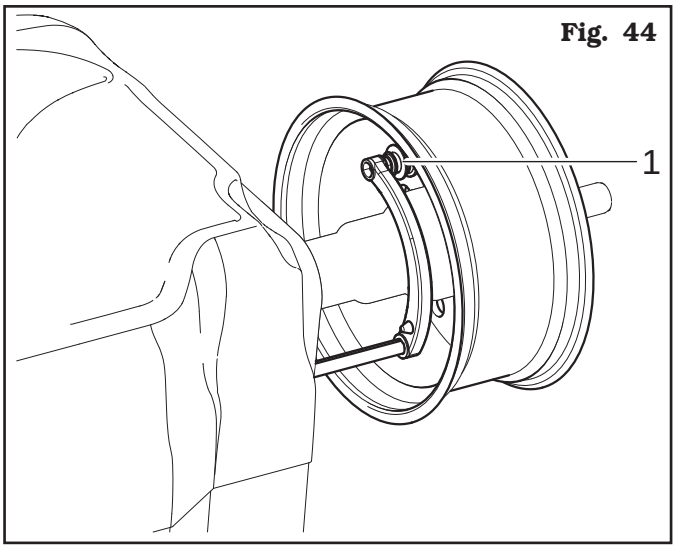

Fig. 45

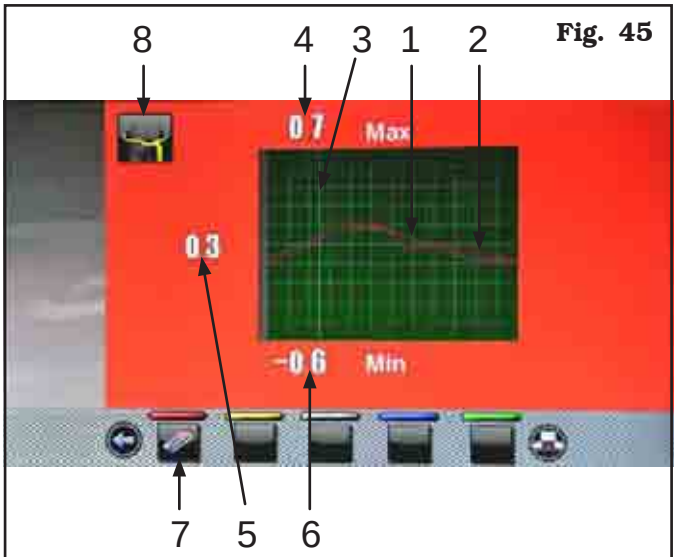

1 – Fundamental sine wave(fuchsia-coloured-graph)
2 – Graph of detected eccentricity (red)
3 – Slider that indicates the current position of the rim ("12 o'clock") (green)
4 – Value in mm of the highest peak of imperfection detected on the rim
5 – Value in mm of imperfection of the rim at the current position
6 – Value in mm of the lowest peak of imperfection detected on the rim
7 – Graph deleting button
8 – Run-out mode carried out where the data is displayed in the graph

The red graph (**Fig. 45 ref. 2**) represents exactly the geometric shape of the rim. The more the circle is round and linear, the more the graph is flat, unlike the more the circle has deficiencies, the more the graph is large.
You can follow the eccentricity in the graph by manually turning the rim, the green-coloured-slider (**Fig. 45 ref. 3**), indicates the position of the rim in the "12 o'clock" position.

14.2.2 Programs setting through "Measurement being acquired" screen page

From the "Home" page, press the (**Fig. 36 ref. 1**) button to display the "Measurement being acquired" screen below:

PRESS THE BUTTON 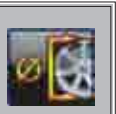 (Fig. 36 ref. 1) TO DISABLE AUTOMATIC FUNCTION OF THE DISTANCE-DIAMETER CALIPER ARM WHEEL BALANCING SELECTION, DESCRIBED IN PAR. 14.2.1. TO BE ABLE TO REUSE THE AUTOMATIC FUNCTION TO SELECT THE WHEEL BALANCING PROGRAM WITH GAUGE ARM, IT IS NECESSARY TO RETURN TO "HOME" PAGE, BY PRESSING THE BUTTON .

The selection of the wheel balancing program is possible in 2 ways:

- with highlighted program (blue colour) by pressing the or until you see the desired program. With this mode only the 11 standard programs can be selected (DYN, ALU-S, ALU-S1, ALU-S2, STAT, STAT-1, STAT-2, ALU-1, ALU-2, ALU-3, ALU-4).

IF THE PROGRAM NAME IS NOT HIGHLIGHTED (BLUE), PRESS THE BUTTON REPEATEDLY UNTIL THE ABOVE CONDITION IS REACHED.

- Press the button to display the following programs selection screen page:

Use the arrows and/or to select the wished mode (blue). In this mode you can select the 11 standard programs (listed above) and special programs (PAX360, PAX420, PAX460, PAX700).

AFTER YOU HAVE SELECTED THE DESIRED PROGRAM, USE THE DISTANCE-DIAMETER CALIPER AND/OR THE EXTERNAL DATA GAUGE (GAR307 OR GAR305) (IF ANY) TO DETECT THE MEASURES REQUIRED BY THE PROGRAM.

WHENEVER THE DISTANCE-DIAMETER CALIPER AND/OR THE EXTERNAL DATA GAUGE (GAR307 OR GAR305, SEE FIG. 39) (IF ANY) IS KEPT IN POSITION FOR A FEW SECONDS AGAINST THE RIM (UNTIL THE MACHINE MAKES AN APPROPRIATE SOUND NOTIFICATION) , THE POSITION IS STORED AND THE VALUES MEASURED IN THE PRE-ARRANGED FIELDS IN THE SELECTED WHEEL BALANCING PROGAM ARE LOADED.

- After entering all the required measures, you can spin the wheel by pressing the button and closing the protective guard.

14.3 Indicative display of points where to detect measures/to fit weight

IT IS VERY IMPORTANT TO REMEMBER THE POINTS SELECTED FOR MEASUREMENT INSIDE THE RIM SINCE DURING THE WEIGHTS FITTING WITH FIXED LASER YOU WILL NOT HAVE ANY OTHER REFERENCE EXCEPT FOR THE CROSS LINE ON THE RIM, GENERATED BY THE LASER ITSELF. THE POSITIONING IN DEPTH WILL BE AT THE DISCRETION OF THE OPERATOR.

Depending on the type of program selected,the machine shows on the monitor the guideline points where to take measures and, consequently, where you must apply weights (**Fig. 46 ref. 4-5**).

Fig. 46

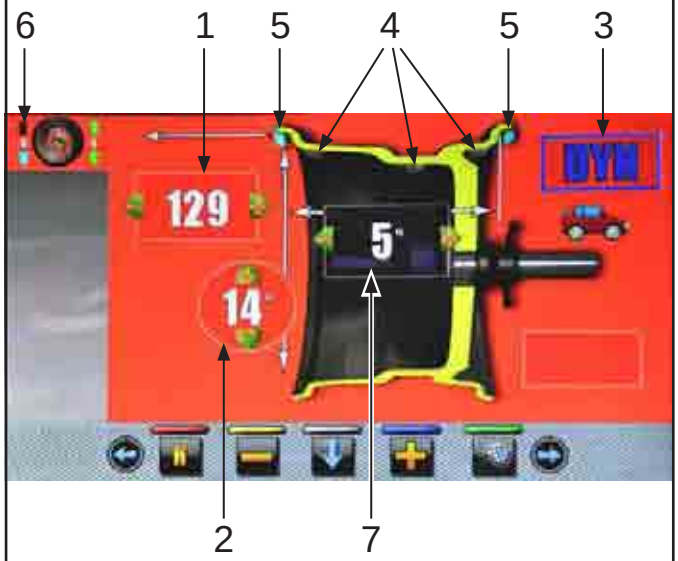

KEY
1 – 1st weight fitting point distance
2 – Rim diameter
3 – Balancing mode
4 – Point at which to take the measure/adhesive weight fitting
5 – Point at which to take the measure/clip weight fitting
6 – Last unbalance detected by the machine
7 – Rim width

THE MORE THE POINTS CHOSEN FOR THE PROBING ARE DISTANT FROM EACH OTHER THE MORE THE BALANCING WILL BE EFFECTIVE.

14.3.1 Weights positioning

The monitor displays when it is absolutely necessary that the weight is applied at "12 o'clock" position. Pay particular attention to the content of the weights identification icons since if the following words H 12 are displayed, then the icon corresponding weight has to be applied at "12 o'clock" position (typical of ALU-S1, ALU-S2 programs).

IF ALL MEASURES REQUIRED BY THE PROGRAM HAVE NOT BEEN TAKEN/INSERTED, THE MACHINE DOES NOT ALLOW THE WHEEL SPIN TO DETECT THE UNBALANCE.

14.4 Displaying the active/modifiable field

During the various phases of measures detection, the active field turns blue.

Pressing the buttons or you can change the value and/or program inside the active field. To change the selected active field, simply press the button until the desired field is coloured blue.

THE SELECTION OF THE ACTIVE FIELD IS DONE BY HIGHLIGHTING THE FIELDS IN A CLOCKWISE DIRECTION.

NORMALLY DURING THE DETECTION OF MEASUREMENTS, THE 1ST ACTIVE FIELD WILL BE THE ONE FOR THE SELECTION OF THE PROGRAM.

THERE IS A CASE, HOWEVER, IN WHICH THE 1ST ACTIVE FIELD WILL BE THE RIM WIDTH.

THIS CASE WILL OCCUR ONLY IF FROM "HOME" PAGE IS DETECTED ONLY ONE MEASUREMENT INSIDE THE RIM. THE PROGRAM WILL AUTOMATICALLY SET TO "STATIC" BUT WILL BE ALLOWED (IN CASE OF THE ABSENCE OF THE GAUGE WIDTH) TO MANUALLY ENTER THE WIDTH OF THE RIM AND QUICKLY SWITCH TO THE PROGRAM "DYNAMIC".

14.5 Wheel balancing screen page description

After executing the spin of the wheel, the monitor displays a series of important information that helps the operator in his operations and subsequent choices.

Fig. 47

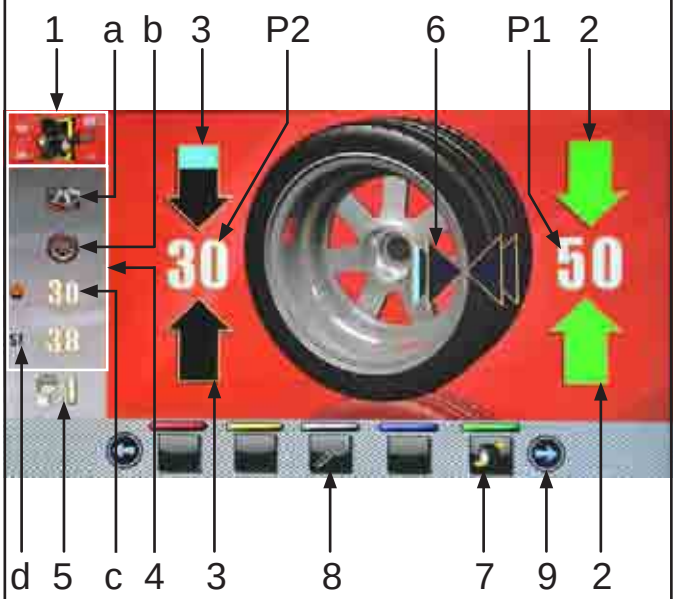

KEY

1 – Measures used by the program to perform the spin and detect the values in P1 - P2
P1 – Weight to be fitted on rim outer side
P2 – Weight to be fitted on rim inner side
2 – Wheel placed to fit the weight on wheel outer side (arrows both green)
3 – Wheel not placed to fit the weight on wheel inner side (blue/black arrows)
4 – Wheel balancing suggestions
4a – SPLIT Program (Clip weights program) or MATCHING Program
4b – SPOKES Program (program with adhesive weights)
4c – ECO-WEIGHT Program with weight value to be fitted (if the value is of blue, the machine advises not to use it)
4d – STATIC Program
5 – N° user (if selected)
6 – Arrows indicating the weight fitting point with distance-diameter caliper arm
7 – Wheel repositioning button for weights fitting
8 – Display the actual weight
9 – By pressing the button you will see the following page where you can select one of the programs suggested by the machine.

IF THE GUARD AND REPOSITIONING FUNCTION ARE DISABLED, ON BUTTON 7 YOU WILL SEE THE 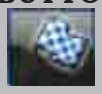 **ICON THAT WILL ALLOW THE WHEEL SPIN WITHOUT RETURNING TO THE PREVIOUS PAGE. THE POSITIONING OF THE WHEEL FOR THE APPLICATION OF THE WEIGHTS MUST BE DONE MANUALLY.**

14.5.1 Balancing mode

The machine has the ability to perform the wheel balancing (weights fitting) in 3 different ways:

- using the distance-diameter caliper arm with weights fitting grippers;
- using the laser at “6 o'clock”;
- weights fitting at “6 o'clock” (without the use of lasers).

• **Weights fitting with distance-diameter caliper arm.**

1. Place the adhesive weight on the arm grippers.

Fit the adhesive weight in the pliers of the gauge rod

2. Pull out the gauge until the arrows (**Fig. 47 ref. 6**) both turn green.
3. Rotate the gauge arm until the weight touches the rim.

Fit weight on the position where pliers touches the wheel

4. Bring the distance-diameter caliper arm into resting position.
5. Press the button to change the weight fitting side.
6. Proceed in the same way as described in points 1-2-3.

BEFORE REMOVING THE DIAMETER-DISTANCE CALIPER, PRESS THE BRAKE PEDAL AND HOLD IT DOWN UNTIL THE WEIGHT HAS NOT BEEN APPLIED, ENSURING IN THIS WAY THAT, DURING THESE PHASES, THE WHEEL CAN NOT ROTATE.

- **Weights fitting with laser (at "6 hours").**

THE MACHINE (IF PRE-SET WITH FIXED LASER, ON DELIVERY IT IS SET WITH THE OPTION DESELECTED).
TO USE THIS MODE, IT IS NECESSARY THAT THE RELEVANT FUNCTION IS ENABLED 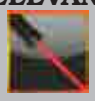 ON THE MENU "OPTIONS" DESCRIBED IN PAR. 15.1.

TO USE THIS WEIGHTS APPLICATION MODE THE OPERATOR MUST REMEMBER THE PRECISE POINT AT WHICH THE MEASUREMENT WAS TAKEN WITH THE DISTANCE-DIAMETER CALIPER ARM.

At the end of the spin, on the rim at "6 hours" is displayed a laser beam (blade) indicating the axis on which to apply the weight. The positioning of the weight (s) in depth shall be at the discretion of the operator, depending on where remembers taking the measure.

BE SURE TO APPLY THE WEIGHT (INTERNAL OR EXTERNAL) AS INDICATED BY THE 2 GREEN ARROWS (Fig. 47 ref. 2 or 3) ON THE CORRESPONDING MONITOR SCREEN.

- **Weights fitting at "6 o'clock" (without the use of lasers).**

TO USE THIS MODE, IT IS NECESSARY THAT THE RELEVANT FUNCTION IS ENABLED 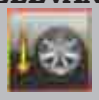 ON THE MENU "OPTIONS" DESCRIBED IN PAR. 15.1.

TO USE THIS WEIGHTS APPLICATION MODE THE OPERATOR MUST REMEMBER THE PRECISE POINT AT WHICH THE MEASUREMENT WAS TAKEN WITH THE DISTANCE-DIAMETER CALIPER ARM.

USING THIS MODE, THE MACHINE ALLOWS YOU TO APPLY ANY ADHESIVE WEIGHTS THAT WOULD BE APPLIED TO "12 HOURS" TO "6 O'CLOCK". IF, AFTER YOU ENABLE THIS MODE, ON BALANCING PROGRAM APPEARED AGAIN THE H 12 ICON (ONLY IN THIS CASE) THE ADHESIVE WEIGHT WILL BE APPLIED TO "12 HOURS".

At the end of the spin, the wheel stops in place to apply the weight at "6 o'clock". The positioning of the weight (s) in depth shall be at the discretion of the operator, depending on where remembers taking the measure.

BE SURE TO APPLY THE WEIGHT (INTERNAL OR EXTERNAL) AS INDICATED BY THE 2 GREEN ARROWS (Fig. 47 ref. 2 or 3) ON THE CORRESPONDING MONITOR SCREEN.

14.6 Use of machines with disabled automatic gauge

The entry of diameter, width and distance measures of the machine rim must be performed manually. The reading of these measures can be made as follows:

- visual readout on graduated scale gauge (distance);
- values readout on rim (diameter and width);
- width value detection with manual gauge (width) (see **Fig. 48**).

MANUAL GAUGE.
Width manual detection **Fig. 48**

14.6.1 Manual setting of wheel dimensions

In case the operator wants to edit and/or manually enter the wheel dimensions, proceed as follows:

- from the desired measurement mode screen, press the button until highlighting with blue the field to modify/edit;
- press the buttons or until reaching the desired value;
- press button to shift to the next value.

After entering all the required measures, you can spin the wheel by pressing the button and closing the protective guard.

NOTE: In case the distance-diameter caliper was disabled, the displayed page for detected unbalance is as follows:

Fig. 49

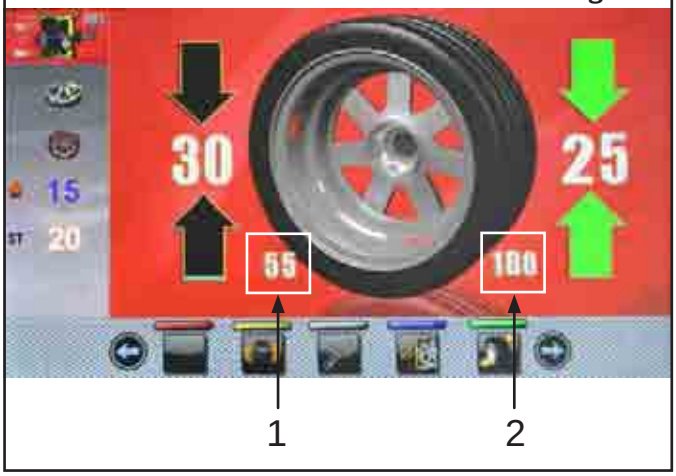

In this screen page,in addition to the information of the detected unbalance, there are measurements in mm where you must remove the gauge arm (**Fig. 49 ref. 1-2**) to apply the weights inside the rim.

14.7 Standard balancing programs

14.7.1 Static

The STATIC program permits balancing wheels by fitting adhesive weights on the outer and inner sides of the rim. Enter the measurements (see Par. 14.2.1 o 14.6.1) and proceed as described in Par. 14.5.
At the end of the procedure, the wheel balancing conditions can be checked by performing a trial spin.

The procedure has now been completed.

14.7.2 Static-1

The STATIC 1 function is a procedure that offsets wheel vibrations using a single weight with clip on a single plane positioned exactly at 12 o' clock.
Enter the measurements (see Par. 14.2.1 or 14.6.1) and proceed as described in Par. 14.5 "Dynamic balancing" (only for wheel inner side).
At the end of the procedure, the wheel balancing conditions can be checked by performing a trial spin.

The procedure has now been completed.

14.7.3 Static-2

The STATIC 2 function is a procedure that offsets wheel vibrations using a single adhesive weight on a single plane positioned exactly at 12 o' clock.
Enter the measurements (see Par. 14.2.1 or 14.6.1) and proceed as described in Par. 14.5 "Dynamic balancing" (only for wheel inner side).
At the end of the procedure, the wheel balancing conditions can be checked by performing a trial spin.

The procedure has now been completed.

14.7.4 Dynamic

The DYNAMIC program allows the wheels balancing by fitting two clip adhesive weights: one on the outside and one on the inside rim. Enter the measurements (see Par. 14.2.1 or 14.6.1) and proceed as described in Par. 14.5.
At the end of the procedure, the wheel balancing conditions can be checked by performing a trial spin.

The procedure has now been completed.

14.7.5 ALU-S

The ALU-S program permits balancing wheels by two fitting adhesive weights on the outer and inner sides of the rim. Enter the measurements (see Par. 14.2.1 or 14.6.1) and proceed as described in Par. 14.5.
At the end of the procedure, the wheel balancing conditions can be checked by performing a trial spin.

The procedure has now been completed.

14.7.6 ALU-S1

The ALU-S1 function permits balancing wheels with light alloy rims by fitting adhesive weights on the outer side and weight with clip on inner side of wheel (at 12 o' clock).
Enter the measurements (see Par. 14.2.1 or 14.6.1) and proceed as described in Par. 14.5 (the inner weight is with clip).
At the end of the procedure, the wheel balancing conditions can be checked by performing a trial spin.

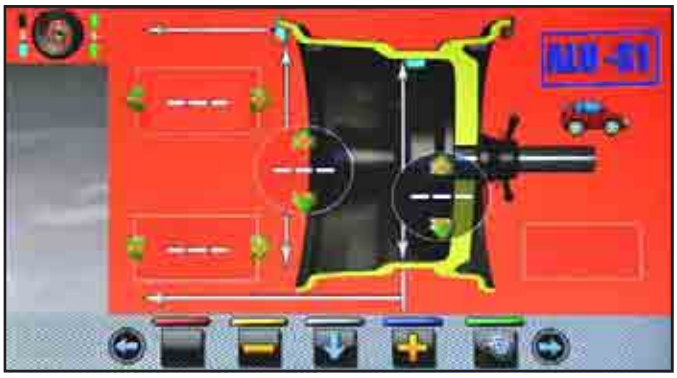

The procedure has now been completed.

14.7.7 ALU-S2

The ALU-S2 function permits balancing wheels with light alloy rims by fitting two adhesive weights: one on the outer and one on inner sides of the rim (the inner weight is at 12 o' clock).
Enter the measurements (see Par. 14.2.1 or 14.6.1) and proceed as described in Par. 14.5.
At the end of the procedure, the wheel balancing conditions can be checked by performing a trial spin.

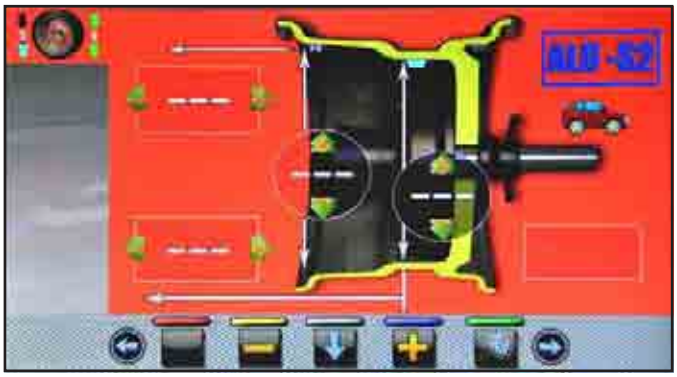

The procedure has now been completed.

14.7.8 ALU-1

The ALU-1 function permits balancing wheels with light alloy rims by fitting adhesive weights on the outer and inner sides of the rim at 12 o' clock.
Enter the measurements (see Par. 14.2.1 or 14.6.1) and proceed as described in Par. 14.5.
At the end of the procedure, the wheel balancing conditions can be checked by performing a trial spin.

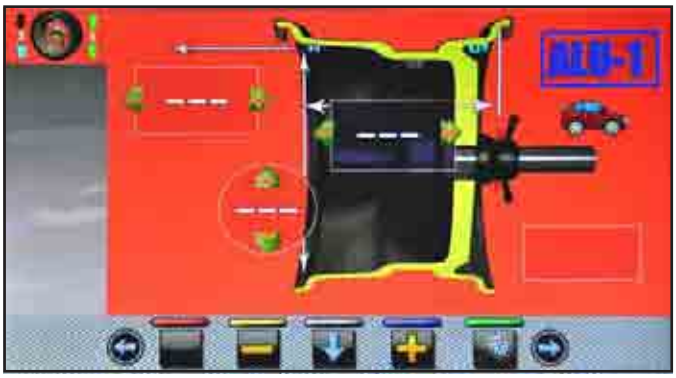

The procedure has now been completed.

14.7.9 ALU-2

The ALU-2 function balances wheels with light alloy rims by fitting adhesive weights on the outside and inside of the rim. The position of the outer weight is not visible but hidden inside. Enter the measurements (see Par. 14.2.1 or 14.6.1) and proceed as for dynamic unbalance.
At the end of the procedure, the wheel balancing conditions can be checked by performing a trial spin.

The procedure has now been completed.

14.7.10 ALU-3

The ALU-3 function is a procedure that uses mixed weights to offset wheel unbalance: weight with clip on inner side of wheel, adhesive weight on outer side, not visible because inside the rim.
Enter the measurements (see Par. 14.2.1 or 14.6.1) and proceed as for dynamic unbalance.
At the end of the procedure, the wheel balancing conditions can be checked by performing a trial spin.

The procedure has now been completed.

14.7.11 ALU-4

The ALU-4 function is a procedure that uses mixed weights to offset wheel unbalance: weight with clip on inner side of wheel, adhesive weight on outer side. Enter the measurements (see Par. 14.2.1 or 14.6.1) and proceed as for dynamic unbalance.
At the end of the procedure, the wheel balancing conditions can be checked by performing a trial spin.

The procedure has now been completed.

14.8 Optional balancing programs

14.8.1 ECO-WEIGHT mode

TO USE THE ECO-WEIGHT PROCEDURE IT IS NECESSARY THAT THE DISTANCE-DIAMETER CALIPER ARM IS ENABLED IN THE "OPTIONS" MENU DESCRIBED IN PAR. 15.1.

THE ECO-WEIGHT PROCEDURE CAN ONLY BE USED WITH THE PROGRAM ALU-S.

This procedure represents a modern system for the reset of the unbalance in order to reduce weights consumption. This procedure ensures a fastest execution of the operations, thanks to a lesser number of spins and repositioning.
After making the wheel spin in ALU-S mode, the monitor shows the total of 2 adhesive weights to precisely correct STATIC and DYNAMIC unbalance.

It is possible to fit a single weight at a predetermined distance from the machine, so as to optimise the weight consumption and reduce both the DYNAMIC and any remaining STATIC unbalance as much as possible.
Unlike the standard STATIC procedure, the ECO-WEIGHT procedure, though only using one weight, also considerably reduces the DYNAMIC unbalance, because the fitting distance of the weight on the rim is also calculated.
From the ALU-S unbalance results page, if there is considerable static unbalance, press the button to display on the following monitor screen:

Press button to select such procedure and bring automatically the wheel into weight fitting position.

Fig. 50

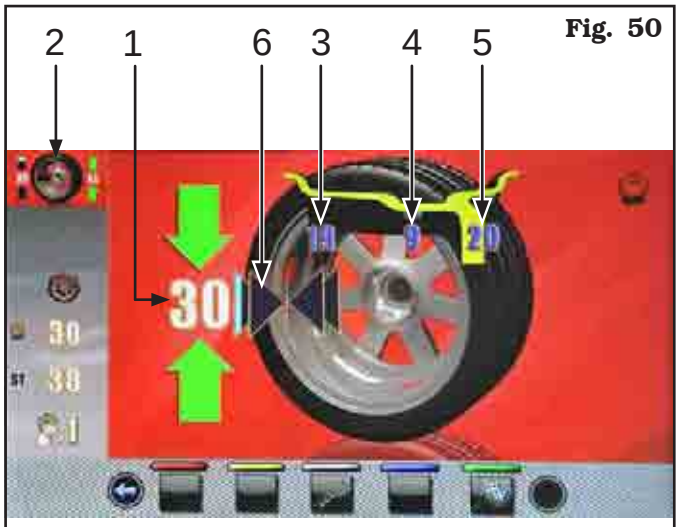

KEY

1 – Only weight to be fitted

2 – Last program and last values used for the spin

3 – Residual dynamic unbalance value (if the value is blue it is not to carry out ECO-WEIGHT procedure)

4 – Static unbalance value (if the value is blue it is not to carry out ECO-WEIGHT procedure)

5 – Residual dynamic unbalance value (if the value is blue it is not to carry out ECO-WEIGHT procedure)

6 – Arrows indicating the weight fitting point with distance-diameter caliper arm

Press the brake pedal and fit the adhesive weight inside pliers as shown in **Fig. 51**.

Fig. 51 Fit the adhesive weight in the pliers of the gauge rod

Pull out the gauge rod until the arrows (**Fig. 50 ref. 6**) turn green.

Fit weight on the position where pliers touches the wheel **Fig. 52**

At the end of the procedure, the wheel balancing conditions can be checked by performing a trial spin.
The ECO-WEIGHT procedure has now been completed.

IMMEDIATELY AFTER HAVING SELECTED THE ECO-WEIGHT PROCEDURE, YOU CAN KNOW IN ADVANCE THE TWO DYNAMIC UNBALANCES AND THE STATIC RESIDUE IN ORDER TO DECIDE WHETHER IT IS CONVENIENT TO CONTINUE (SEE FIG. 50).
IF BOTH DYNAMIC UNBALANCES AND STATIC RESIDUE ARE SHOWN AS WHITE VALUES ON THE MONITOR, THIS MEANS THAT THE PROGRAM HAS DECIDED THAT IT IS BETTER TO CONTINUE. WHILE IF, ON THE OTHER HAND, ONE OR MORE VALUES ARE BLUE, THE PROGRAM SUGGESTS USING THE STANDARD ALU-S PROCEDURE.

PRESS BUTTON **ONCE. THE TWO RESIDUAL DYNAMIC UNBALANCES WILL BE DISPLAYED ON MONITOR.**

PRESS BUTTON **ONCE MORE. THE CALCULATED REAL STATIC WEIGHT AND THE RESIDUAL STATIC WEIGHT WILL BE DISPLAYED ON SCREEN.**
IF YOU ARE NOT WISHING TO OPERATE WITH THE ECO-WEIGHT PROCEDURE, PRESS BUTTON 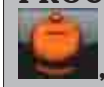 **, ONCE MORE. THE ALU-S UNBALANCE VALUES WILL BE DISPLAYED AGAIN.**
WHILE IF YOU WISH TO OPERATE WITH THE ECO-WEIGHT PROCEDURE, PRESS BUTTON **FOR A LONGER TIME (OR KEY** **) TO GO BACK TO THE RESIDUAL DYNAMIC/ECO-WEIGHT WEIGHT DISPLAY SCREENS.**

14.8.2 SPLIT mode

The Split procedure proves useful when the dynamic unbalance of a wheel is fairly high and the weight to be fitted is not available, for instance a 100 g weight. It's possible then to correct the unbalance dividing the amount of weight into two weights of smaller size.

The Split procedure eliminates errors by using the "DYNAMIC" program, as for example by manually fitting two 50 g weights close to one another, instead of only a 100 gr one.

For example:

100 g WEIGHT
TO BE FITTED TO CORRECT UNBALANCE

TWO SMALLER WEIGHTS (50g)
FITTED MANUALLY

TWO SMALLER WEIGHTS (55g)
USING SPLIT PROCEDURE

Proceed to “DYNAMIC” unbalance measurement displaying by performing a standard wheel spin.

Once detected the unbalance values, verify that the machine displays the ability to use the "SPLIT" option (**Fig. 47 ref. 4a**). Press button to shift to the next screen page.

Press button to enter the “SPLIT” function. On the monitor screen will be displayed where you must enter the value of the weights to be fitted.

Press button to select the outer weight to edit.

Press buttons or to increase or decrease the total weight to be fitted.

THE BLUE VALUE INDICATES WHICH VALUE IS ACTIVE AND YOU ARE EDITING.

THE HIGHER THE CHOSEN WEIGHTS VALUE IS, THE MORE THEY WILL BE SPACED.

After choosing the value of the weights to be fitted, press button to position the wheel for the application of the 1st clip weight.

THE TWO GREEN ARROWS INDICATE THAT THE WHEEL IS PROPERLY POSITIONED FOR THE APPLICATION OF THE 1ST WEIGHT.

Fit the clip weight of the chosen value at 12 o’clock on the outside of the wheel. Press again button to position the wheel for the fitting of the 2nd clip weight.

Fit the clip weight of the chosen value at 12 o'clock on the outside of the wheel. Press button to highlight the value of the weights to be fitted on the inside of the wheel.

Repeat the above steps for the weights to be fitted inside the wheel.
At the end perform again a checking spin to see that you have applied the weights correctly.

14.8.3 Weights hidden behind spokes mode

Adhesive correction weight positioning may not look attractive on some types of rims. In this case, the "weights hidden behind spokes" mode can be used. This splits any correction weight on the outer side into two parts to be hidden behind the rim spokes. It can be used in both ALU-S or STATIC modes.

Display the ALU-S or STATIC, unbalance measurements, by performing a standard wheel spin.

Once detected the unbalance values, verify that the machine displays the ability to use the "spokes" options (**Fig. 47 ref. 4b**).

Press button to shift to the next screen page.

Press button to shift to access the corresponding function.
On the monitor the next screen page will be displayed:

Bring any spoke upwards at "12 o'clock" position and press the button to confirm and continue.

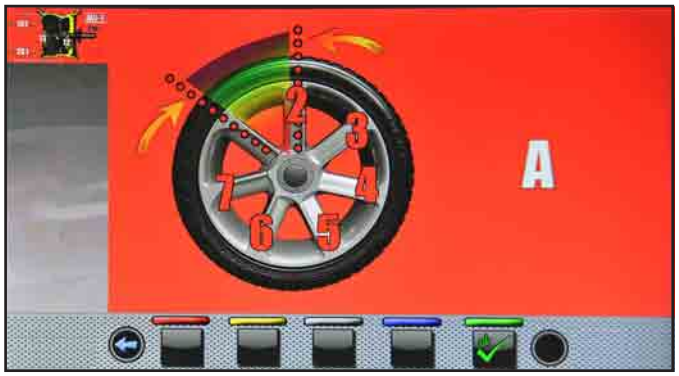

Lead to “12 hours” the 2nd spoke. The machine will automatically calculate the total number of spokes. If the value shown on the screen (A) is correct, press the button .
The machine automatically calculates weight position in two positions hidden behind the spokes. The monitor shows the amount of weight to be applied behind the FIRST spoke and the rim will reach the position to apply the FIRST weight.

Extract the gauge rod, and fit the FIRST weight in the position shown by the machine, as explained in Par. 14.5.1. Press the button to confirm that they have applied the FIRST weight and to automatically position the wheel for the fitting of the 2nd weight. The monitor shows the amount of weight to be applied behind the SECOND spoke.
Pull out the gauge rod and fit the SECOND weight in the position shown by the machine, as done for the first weight.

Press the button to confirm that you have applied the SECOND weight and get back to the initial situation of unbalance, before performing the "weights hidden behind the spokes" procedure
Perform another test spin. The “weights hidden behind spokes” procedure is completed.
Complete the operation by adding an additional weight inside the rim as required by the selected mode (ALU-S or STATIC).

14.8.4 Matching mode

The Matching procedure offsets strong unbalance, reducing the weight quantity to be fitted on the wheel to achieve balancing. This procedure permits reducing unbalance as much as possible by offsetting the tyre unbalance with that of the rim in any used program.

Proceed to unbalance measurement displaying by performing a standard wheel spin.

⚠	**THE MATCHING PROCEDURE CAN BE CARRIED OUT ONLY IF THE STATIC UNBALANCE IS > 30 G.**

Once detected the unbalance values, verify that the machine displays the ability to use the "matching" options (**Fig. 47 ref. 4a**).

Press button to shift to the next screen page.

Press button to enter the relevant function.
On the monitor the next screen page will be displayed:

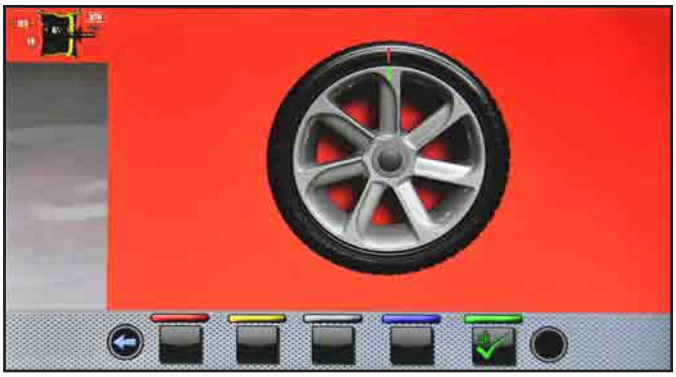

STEP 1. Move the slider on the flange to the "12 o'clock" position. Make a reference mark, using chalk for instance, on the rim and tyre, in line with the arrow on the flange, so as to be able to fit the rim back on in the same position on the machine.

Make a reference mark on the rim and tyre, in line with the arrow on the flange

Press button to confirm that step 1 has been completed.
On the display the next screen page will be displayed:

STEP 2. Remove the wheel from the wheel balancer. Remove the tyre and turn it on the rim by 180°.

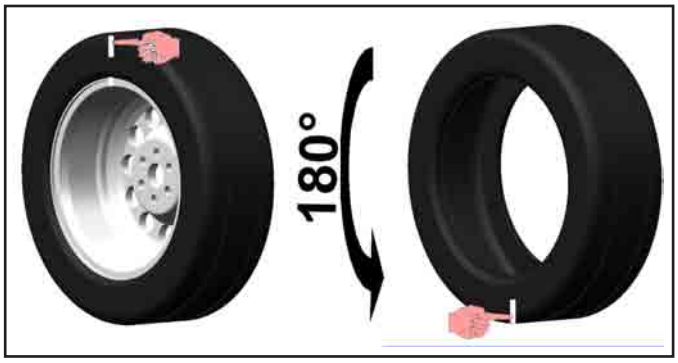

Fit the wheel back on the wheel balancer, positioning the reference mark on the rim in line with the arrow on the flange.

Position the reference mark on the rim in line with the arrow on the flange.

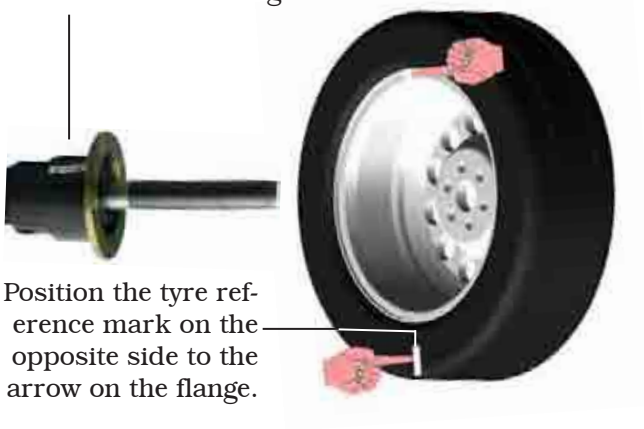

Press button to confirm that step 2 has been completed.
On the display the next screen page will be displayed suggesting to perform a spin of the wheel.

After having fitted wheel back in position, close the protection guard to make an automatic wheel spin.
At the end of the spin the monitor will display the following screen:

Fig. 53

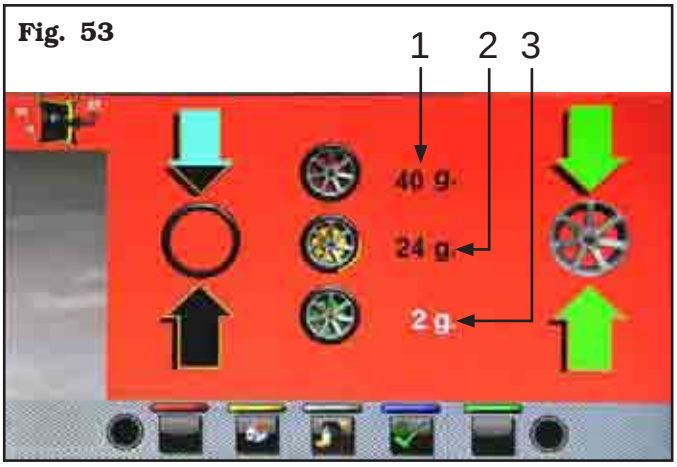

In this screen you will see the dynamic unbalance that the wheel had before performing the operation (**Fig. 53 ref. 1**), the dynamic unbalance after having rotated the tyre of 180 ° compared to the rim (**Fig. 53 ref. 2**) and the unbalance which can be obtained following the directions of the machine (**Fig. 53 ref. 3**).

STEP 3. If the value of possible unbalance reduction is high, you can proceed as follows:

- Cancel the previously made reference marks. Put new signs, as described below.
- Press the button to bring the wheel into position.

Make the reference mark on RIM at 12 o' clock (see **Fig. 54**).

Fig. 54

- Press the button to bring the wheel into position.

Mark the reference mark on the TIRE at "12 o'clock" position.

Press button to confirm that step 3 has been completed.

STEP 4. Remove the wheel from the wheel balancer. Dismount and remount the tyre on the rim so as to bring the two reference marks (rim and tyre) to coincide. Refit the wheel on the balancer (see **Fig. 55**) with the two reference marks next to the arrow on the flange.

Fig. 55

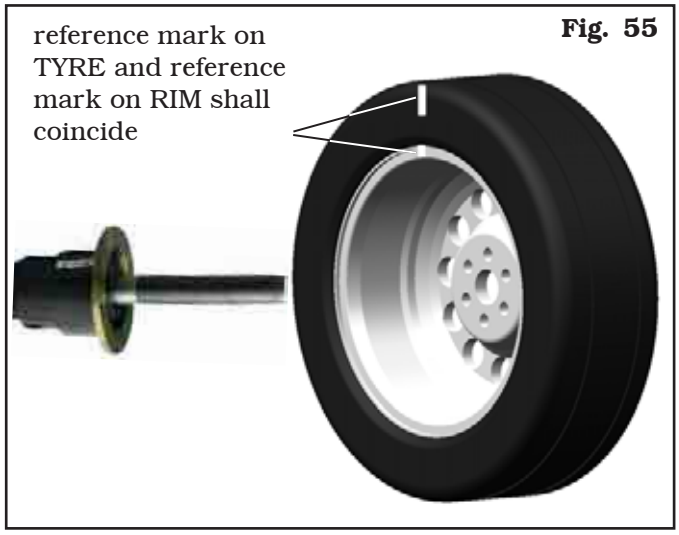

Press button to confirm that step 4 has been completed.

Perform another spin closing the protection guard, to check the expected unbalance reduction and correct any residual unbalance, as described in Chap. 14.5.1.

14.9 Special balancing programs

14.9.1 Pax

The PAX mode is a special procedure specially devised to balance wheels using the "PAX System ®". 2 adhesive weights on different planes are used on rim inner side.

To launch a PAX measurement, proceed as follows:

- Make sure there are no stones and/or mud on the wheel. Remove any counterweights. Fit the wheel and make sure it is properly fastened (see Chap. 12).
- Press button from "Home" page. On the screen that appears, press the button to switch to measuring mode selection screen below.

Use the arrows or to select the PAX mode. At the end press push button . The machine will be configured as follows to perform the measurement and on the video screen will appear the indication of the specific measures of the selected wheel type.

Close the protection guard to perform the automatic wheel spin.

In just a few seconds, the wheel runs at normal speed and the monitor shows wheel rotation.
After the spin, the wheel stops automatically, taking into account the measured unbalance so that the fitting position of the weight will be at 12 o' clock.
The the monitor show the weight required to correct the unbalance.
Open the protection guard and proceed to fit the adhesive weight as shown for the ALU-S mode (see Par. 14.7.5).

14.10 Recalculation Function

After making a spin, the wheel automatically stops, indicating the weight/sto be fitted and its/their position. In case the operator does not want the type of wheel balance proposed by the machine (program type, weights size, etc ...), proceed with the re-calculation of the wheel balancing without rerunning the spin of the wheel.
To do this, proceed as described below:

- press the button to return to the measures detection/program selection page;
- select a new balancing program as indicated in Par. 14.2.2;
- take with the gauge arm the measures required by the selected program;
- press button to perform the re-calculation. The monitor will display the weights and the positions in which they will be applied.

If also in this case the operator should decide to further modify the balancing program, it is sufficient to proceed as described above without having to spin the wheel.
When the result of the recalculation does not satisfy the operator, it is recommended to do a spin of the wheel to confirm the findings from the operation of recalculation itself.
After the launch of the wheel, the machine, in addition to displaying the unbalance value, draw up automatically all the programs measurement fields that are consistent with those measures that were taken previously and at the same time erases all measures which are not consistent.

14.11 Motorbike Mode wheel balancing

By enabling the “motorbike wheel balancing” function, the wheel balancers can also balance motorbike wheels.
Before detecting the wheel sizes (see Par. 14.2.2), select motorcycle wheel balancing mode proceeding as described below:
press button and then button . On the screen that appears, press the button to switch to programs and measurements acquisition selection screen below.

Use the arrows or to select the wished mode. At the end press push button . The machine will be configured as follows to perform the measurement in the desired mode and on the screen will appear an indication showing the measures that will be acquired.

The "motorcycle" mode automatically recalculates the wheel distance measurement, increasing this by the length of the optional extension GAR181 A1.
To fit the extension (**Fig. 56 ref. 2**), first press the threaded ring nut (**Fig. 56 ref. 1**) in the hole provided and then screw the plastic terminal (see **Fig. 56**).

THE EXTENSION WILL ONLY HAVE TO BE SCREWED UP WHEN BALANCING IS PERFORMED IN "MOTORBIKE" MODE.

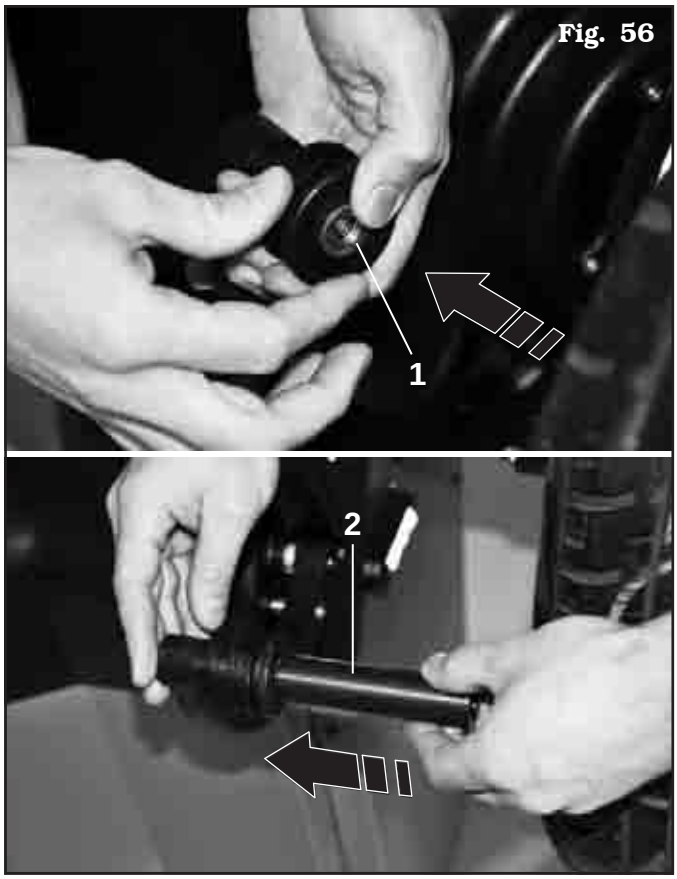

Fig. 56

Balancing procedures are identical for both modes (car/motorbike).
By selecting motorbike, besides DYNAMIC balancing (see Par. 14.7.4) STATIC balancing and/or ALU-S (Par. 14.7.1 and/or 14.7.5) can also be performed.

15.0 USER MENU (OPTIONS AND CALIBRATION)

From the main page "Home" press the button to move to the next screen page and the button to access the user menu. On the monitor, the following screen appears where you can enter the password.

The user login password is: **1234**.
After entering the correct password you will see the following screen:

Fig. 57

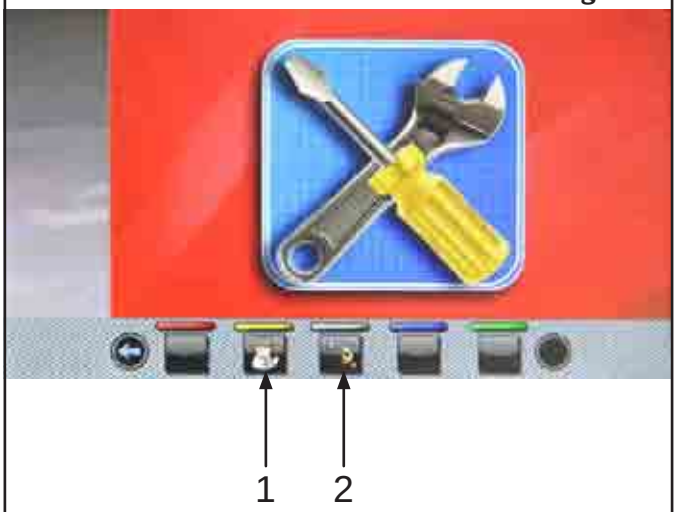

KEY
1 – Options menu push-button
2 – Calibrations menu push-button

15.1 Options menu

Press the button to display the monitor screen to enable/disable options as shown below:

To enable / disable individual functions simply highlight the icon using the buttons and/or and press the button .

Pressing the button may involve, besides, the change in the unit of measure from "mm" to "inch" and vice versa (where applicable) or access to a sub-screen for values settings values (see Par. 15.1.1 or 15.1.2). After you select/deselect the desired options, exit the menu by pressing the .

List of available options

Enable/disable the protection guard/ spin (enabled by default).

Enable/disable the detection diameter width caliper (enabled by default).

Enable/disable the display of static threshold after each spin (enabled by default).

It allows you to set the thresholds for each of the balancing mode weights (see Par. 15.1.1).

Enable/disable the lock function for caliper arm in position (disabled by default).

It allows you to change the unit of measurement of the weights from grams to ounces and vice versa.

It allows you to enable/disable the width function detected by GAR305 or GAR307 (enabled when fitted as standard on the machine).

Enable/disable the ECO-WEIGHT (enabled by default).

Enable/disable the positioning of weights at "6 o'clock" (disabled by default).

Enable/disable the pneumatic brake after the spin (disabled by default).

It allows you to change the unit of measure of the distance of the weights fitting point from mm to inches and vice versa.

Enable/disable the light (enabled if mounted on the machine).

Enable/disable the dynamic residues in the ECO-WEIGHT (enabled by default).

Enable/disable the functions of motorbike balancing (disabled by default).

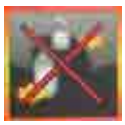

Enable/disable the encoder mounted on the spin motor (disabled by default).

It allows you to change the unit of measurement of the rims width from mm to inches and vice versa.

It allows you to set the size values of weights (see Par. 15.1.2).

Enable/disable the RUN-OUT functions (enabled by default).

Enable/disable the functions of machine printing (disabled by default).

It allows the setting of the retrieval of the measures by eye: readout of measures printed on the rim and the graduated scale of the distance-diameter caliper (disabled by default).
NOTE: it is activated only if the diameter width caliper is disabled.

Enable/disable the use of the manual gauge to measure the rim width (disabled by default).
NOTE: it is activated only if the diameter width caliper is disabled.

It allows you to change the unit of measurement of the rim diameter from mm to inches and vice versa.

Enable/disable the weights laser positioning function (GAR308) (disabled by default).

Enable/disable the repositioning of the wheel at the end of the spin (enabled by default).

Enable/disable the users function (disabled by default).

15.1.1 Lower weight limit

Correction weight below a certain limit is normally shown equal to zero. This limit can be set from 10 g to 1 g.
At the end of the spin however, by pressing the button , the weight can be displayed with max resolution of 1 g, not considering the set lower limit.

IN THE PLANT, THE LOWER LIMIT FOR THE DYNAMIC WHEEL BALANCING MODE IS SET TO 5 g. THE LOWER LIMIT FOR ALL THE OTHER MODES IS SET TO 7 g.

KEY
1 - Lower weight limit in the DYNAMIC program to display "OK" (5 g default value)
2 - Lower weight limit in the ALU-STATIC program to display "OK" (7 g default value)
3 - Weights display resolution (5 g default value)
4 - Weight reduction % in the ECO-WEIGHT (0 ÷ 200) (100 default value)

15.1.2 Setting adhesive weight dimensions and static threshold percentage

To ensure the balancing machine precisely calculates the dimensions and total adhesive weights, set the height (thickness) and width of the adhesive weights at your disposal (see **Fig. 58**).

Fig. 58

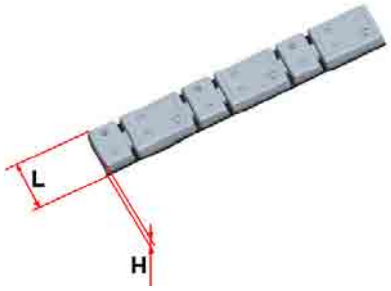

To carry out this setting, press the icon . You will see the following screen:

KEY
1 - Thickness (height) weights (4 mm by default)
2 - Weights width (19 mm by default)

From this screen page, change the size values of weights using the buttons and .

THE BLUE-COLOURED-VALUE IS THE ACTIVE FIELD AND THE MODIFIABLE ONE.

15.1.3 User management

The "User Management", by default, is disabled. To enable it, proceed as described in Para 15.1. After enabling, the icon will be displayed on every page (**Fig. 59 ref. 1**).
The wheel balancers can be used simultaneously by 4 different users.

Fig. 59

Fig. 60

Press button , shown on the monitor (**Fig. 59 ref. 2**) or select the field (**Fig. 60 ref. 1**) and subsequently press the button to display he screen below:

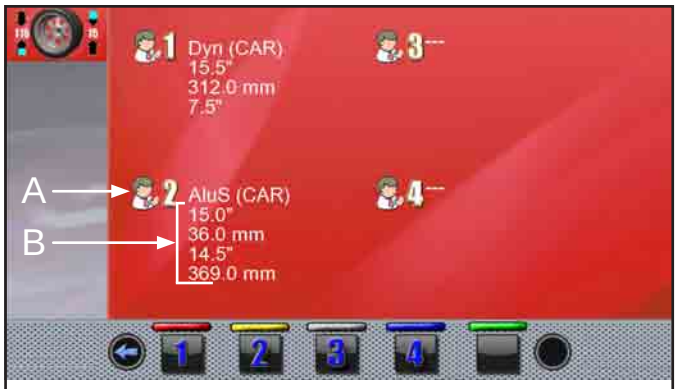

KEY
A – Program used in the last carried out spin
B – Acquired measurements for the last carried out spin

Press any of the available numbers on the buttons at the bottom of the page to select the corresponding user. The system stores the data relating to the last performed spin according to the different operators. You can recall the desired user each time the program displays the specific button (**Fig. 59 ref. 2 and Fig. 60 ref. 1**). The measurements stored for each user are lost when the machine is switched off.
User management is valid for any wheel balancer function.

TO ENABLE OR DISABLE THE "USER MANAGEMENT" FUNCTION, SEE PARAGRAPH 15.1. IF THE FUNCTION IS DEACTIVATED, THE BUTTON **IS DISPLAYED.**

15.2 Machine calibration

Press the button (**Fig. 57 ref. 2**) to display the following screen page on monitor:

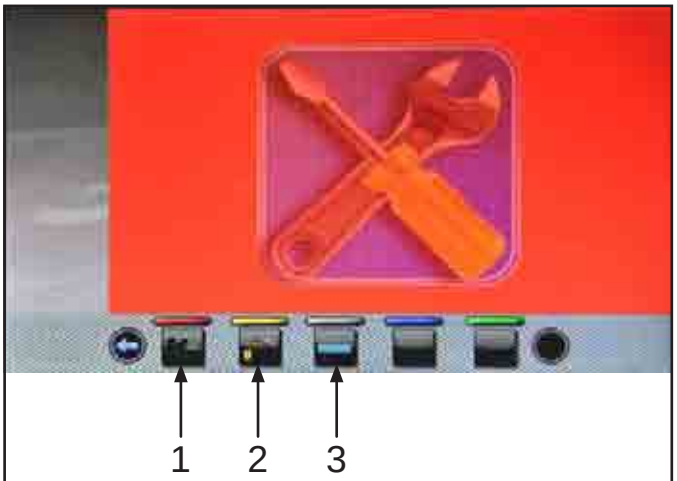

KEY
1 – Mandrel "Ø" calibration
2 – Weight measurement sensors calibration
3 – Gauge calibration

15.2.1 Mandrel "Ø" calibration

Press the button to display the following screen page on the monitor:

After making sure that the spindle is unloaded (no wheel or mounted accessories) and in the case of closed pneumatic mandrel, press the button and close the guard. The spindle will rotate for a few minutes until you see the screen below:

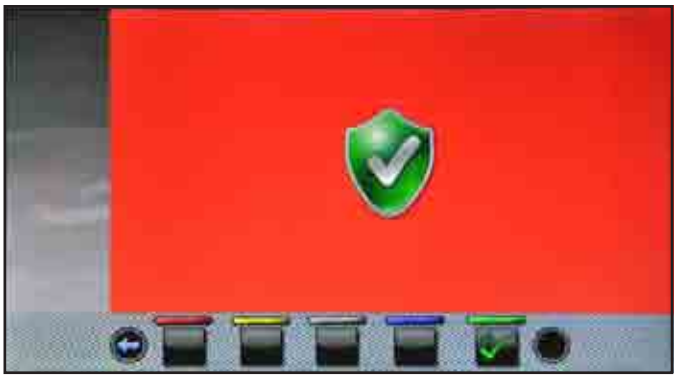

At this point the machine has all its measuring fields.

Press button to return to calibrations screen page.

15.2.2 Weight measurement sensors calibration

ASSEMBLE A BALANCED WHEEL ON THE SPINDLE AND PERFORM THE SPINDLE Ø CALIBRATION PROCEDURE DESCRIBED IN PAR. 15.2.1 (WITH WHEEL MOUNTED).

- Press on the button to display the following screen page:

- Set the size of the rim on the spindle using the distance-diameter caliper arm and the external data gauge (if present) or manual gauge.
- Press the button and close the guard to the perform the 1st spin of the wheel without weights.
- At the end, on the monitor will appear the following screen, saying that you should apply a weight of 100 g to the "12 o'clock" outer rim.

APPLY THE WEIGHT AT A POINT IN WHICH BOTH SIDES OF THE RIM THERE IS THE POSSIBILITY OF APPLYING A CLIP WEIGHT OF 100 g.

- Apply the weight and position it perfectly to the "12 o'clock".
- Press the button and close the guard to perform the 2nd spin of the wheel (100 g weight placed on the outside of the wheel).
- At the end the following screen will appear on the monitor, suggesting to remove the weight of 100 g previously applied on the outer side and apply it on the inside of the rim.

- Turn manually the wheel until you have the weight of 100 g on the outer side at "12 o'clock".
- Press the brake pedal and hold it down during the whole the following operation to avoid unexpected rotation of the spindle.
- Remove the weight from 100 g from the outside of the wheel and apply it on the inner side at "12 o'clock".
- Close the guard to perform the 3rd spin of the wheel (100 g weight placed on the inside wheel).

At the end of the rotation, the video screen below will be displayed to indicate that the operation is finished.

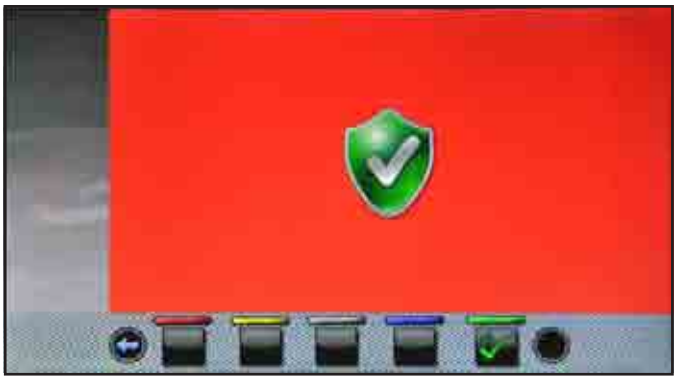

WHEN THE OPERATION IS CONCLUDED, REMOVE THE WHEEL FROM THE SPINDLE AND PERFORM A COMPLETE CALIBRATION PROCEDURE Ø SPINDLE AS DESCRIBED IN PAR. 15.2.1.

15.2.3 Gauge calibration

Press the button to display the following screen page:

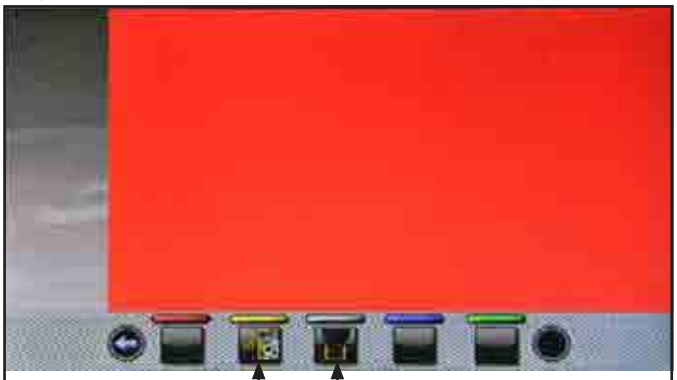

KEY

1 – Distance-diameter caliper calibration

2 – External data gauge calibration

Distance-diameter caliper calibration

Press the button to display the following screen page:

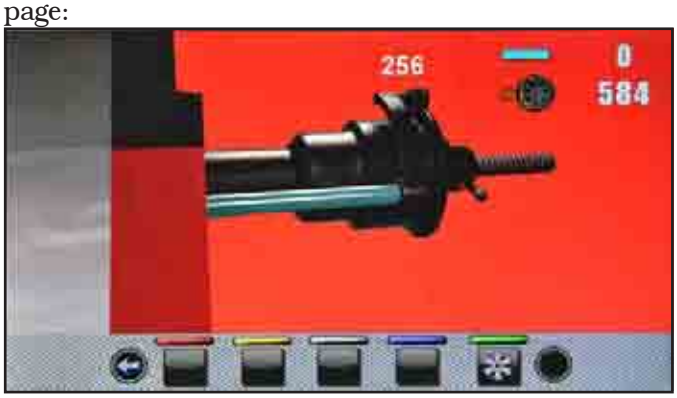

Place the gauge (**Fig. 61 ref. 1**) on the mandrel flange (**Fig. 61 ref. 2**).

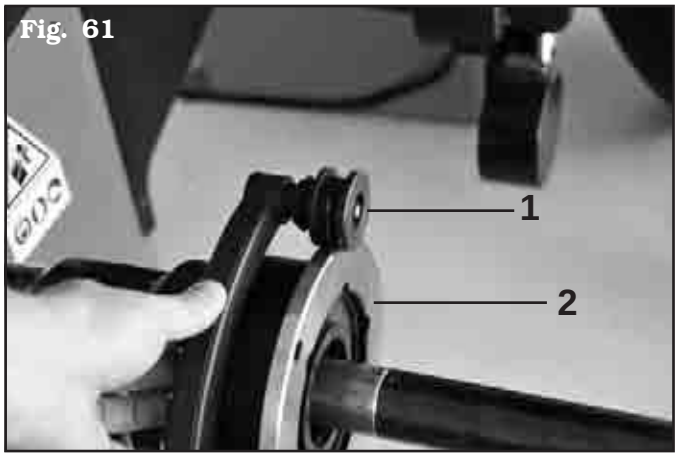

Fig. 61

The following screen will appear on the monitor to indicate the measured values:

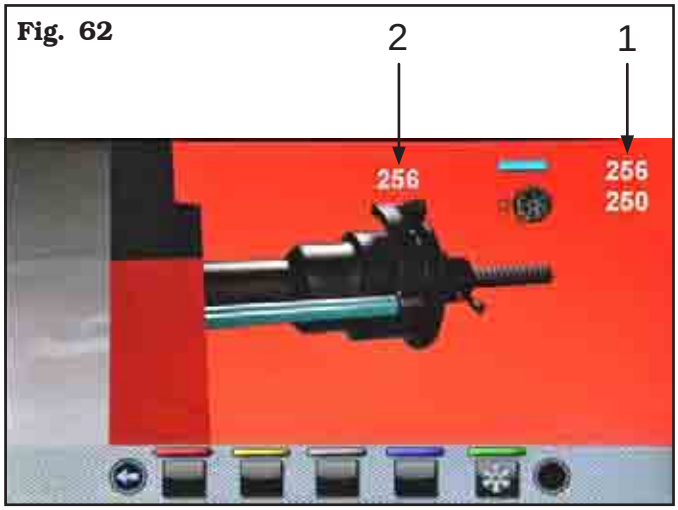

Fig. 62

- The value next to the symbol "scale" (**Fig. 62 ref. 1**) must be equal to the value positioned above the gauge (**Fig. 62 ref. 2**) ± 1 mm.

- Press push button .
  The following screen will appear on the monitor:

- Place the gauge as shown in the following figure:

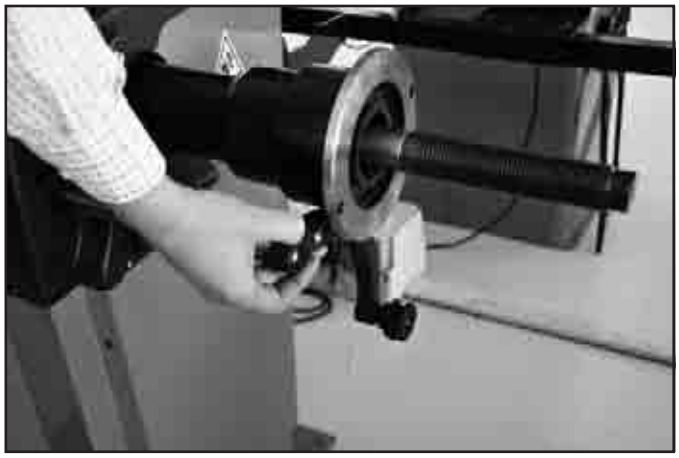

- Press push button . Wait a few seconds until you see the following screen:

- Place the gauge against the mandrel in the lower part of the it but on a smaller diameter than before as indicated on the image on the monitor.

- Press push button .
  On the monitor the next screen page will be displayed:

Measure the exact diameter of a rim (see **Fig. 63**) and place it on the screen on the monitor by pressing the or buttons.

Fig. 63

- Fit the measured wheel on the balancer and lock it on the spindle.
- Turn the gauge bushing (**Fig. 64 ref. 1**) on the inner edge of the wheel upwards (see **Fig. 64**).

Fig. 64

- Press button to end the operation. On the monitor the next screen page will be displayed:

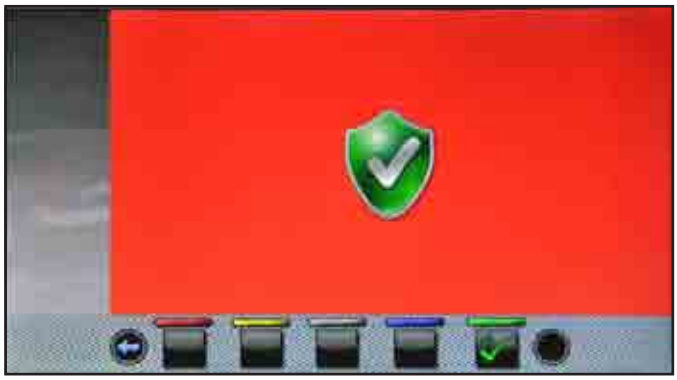

The calibration of the distance-diameter caliper is finished.

Calibration of width caliper (optional)

Press the button to display the following screen page:

TO PERFORM THIS CALIBRATION, THE SPINDLE MUST BE UNLOADED (NO WHEEL OR ACCESSORIES MOUNTED ON IT) AND WITH CLOSED PNEUMATIC MANDREL.

Move the tip of the width measuring device (**Fig. 65-66 ref. 1**) by the mandrel end (**Fig. 65-66 ref. 2**) (in case of pneumatic mandrel, move it next to upper edge of the closed mandrel).

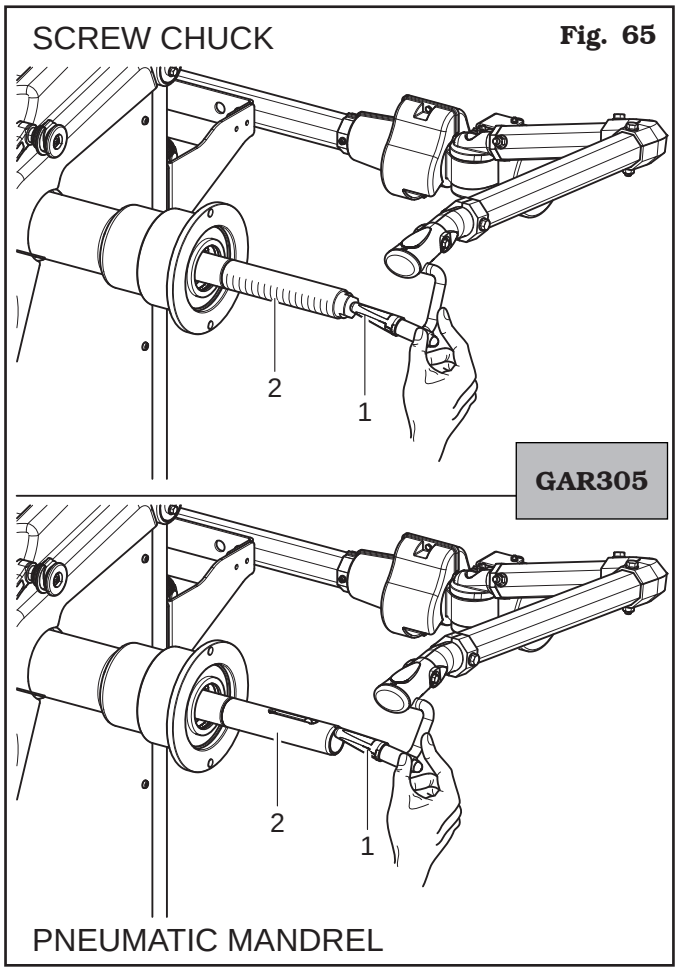

Fig. 65

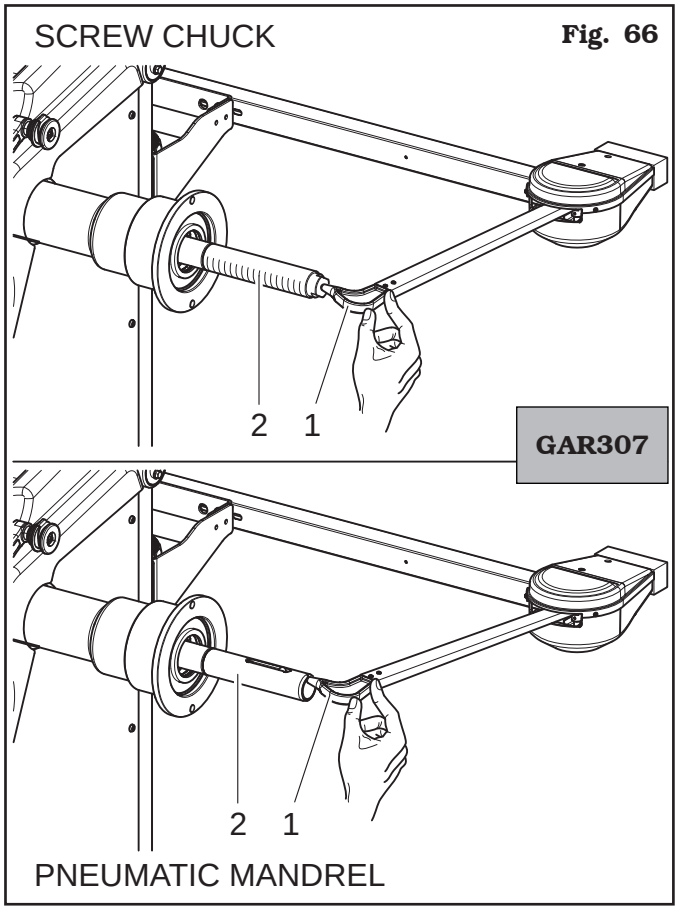

Press button .
On the monitor the next screen page will be displayed:

Move the tip of the width measuring device (**Fig. 67 ref. 1**) in line with the outer surface of the flange (**Fig. 67 ref. 2**).

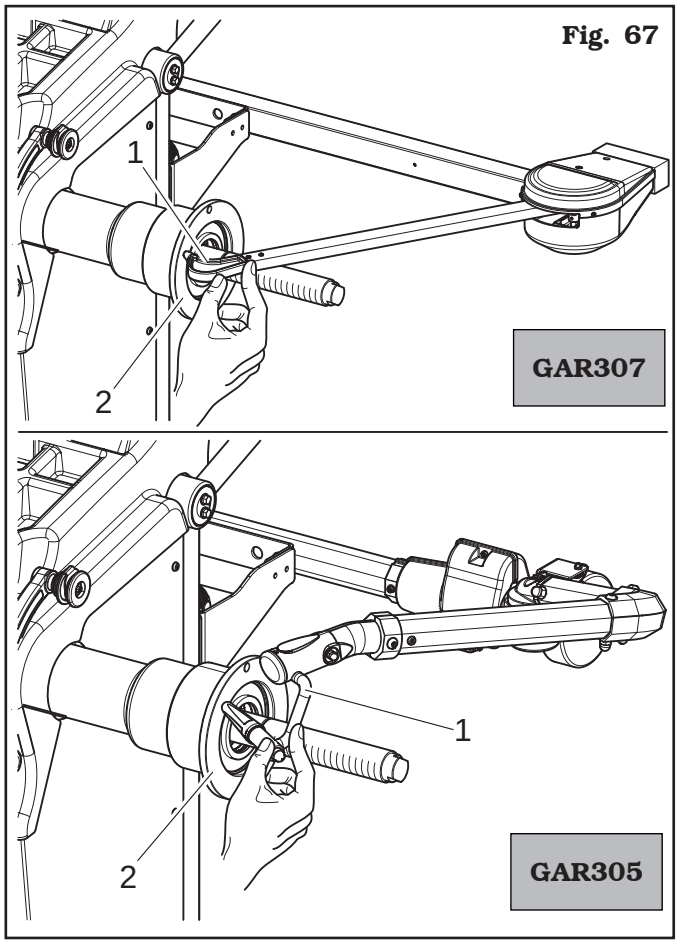

Press button . At the end of the operation, the following screen will appear on the monitor:

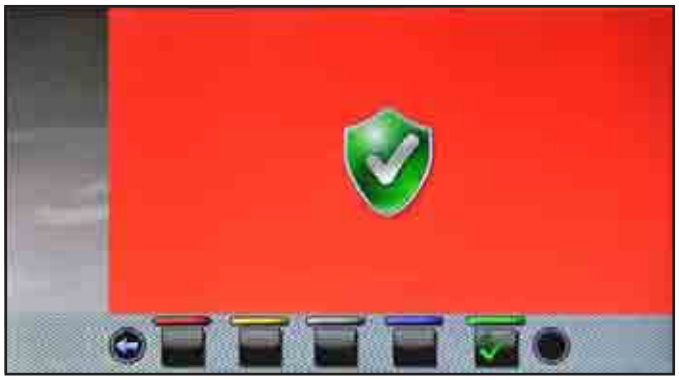

The calibration of the external data gauge is finished.

16.0 ERROR SIGNALS

During wheel balancer operation, if wrong commands are given by the operator or device faults occur, an error code may appear on the monitor screen.
Below is a troubleshooting chart.

Error code	Description
2	Planned wheel speed not reached
3	Calibration overcoming
4	Wheel speed stability out of tolerance
5	Encoder calibration error
6	Encoder samples not sufficient
7	Mandrel calibration error
8	Piezo calibration values out of tolerance
9	Wheel rotations not completed
10	Pneumatic chucking table open
11	Incorrect gain calibration
12	Distance-diameter caliper value not released
13	Distance-diameter caliper value not released
14	Firmware error
15	Runout samples not sufficient
17	External data gauge enabled
27	Rotate the wheel to make a complete rotation
28	Piezo calibration error
29	Distance out of tolerance level
31	Distance-diameter caliper released
32	Parameters format incompatible

17.0 ROUTINE MAINTENANCE

BEFORE CARRYING OUT ANY ROUTINE MAINTENANCE OR ADJUSTMENT PROCEDURE, POSITION THE MAIN SWITCH "0", DISCONNECT THE MACHINE FROM THE ELECTRICITY SUPPLY USING THE SOCKET/PLUG COMBINATION AND CHECK THAT ALL MOBILE PARTS ARE AT A STANDSTILL.

BEFORE EXECUTING ANY MAINTENANCE OPERATION, MAKE SURE THERE ARE NO WHEELS LOCKED ONTO THE MANDREL.

PNEUMATICALLY UNPLUG THE MACHINE (ONLY FOR LIBRAK355P - LIBRAK355PS).

To guarantee the efficiency and correct functioning of the machine, it is essential to carry out daily or weekly cleaning and weekly routine maintenance, as described below.
Cleaning and routine maintenance must be conducted by authorized personnel and according to the instructions given below.

- Remove deposits of tyre powder and other waste materials with a vacuum cleaner.

DO NOT BLOW IT WITH COMPRESSED AIR.

- Do not use solvents to clean the pressure regulator.

ANY DAMAGE TO THE MACHINE DEVICES RESULTING FROM THE USE OF LUBRICANTS OTHER THAN THOSE RECOMMENDED IN THIS MANUAL WILL RELEASE THE MANUFACTURER FROM ANY LIABILITY!!

18.0 TECHNICAL DATA

	LIBRAK			
	355	355P	355S	355PS
Wheel max. weight (Kg)	70			
Max. absorbed voltage (W)	200			
Power supply	230V 50/60 Hz 1 ph			
Balancing precision (g)	± 1			
Balancing speed (rpm)	< 100			
Rim width setting (inches)	1.5” ÷ 22”			
Rim diameter setting (inches)	10” ÷ 30”			
Max wheel diameter inside protection (inches)	44”			
Max wheel width inside protection (mm)	560			
Sound emission level (dBA)	<70			
Cycle time (sec)	6			
Weight (Kg)	120			

18.1 Dimensions

Fig. 68

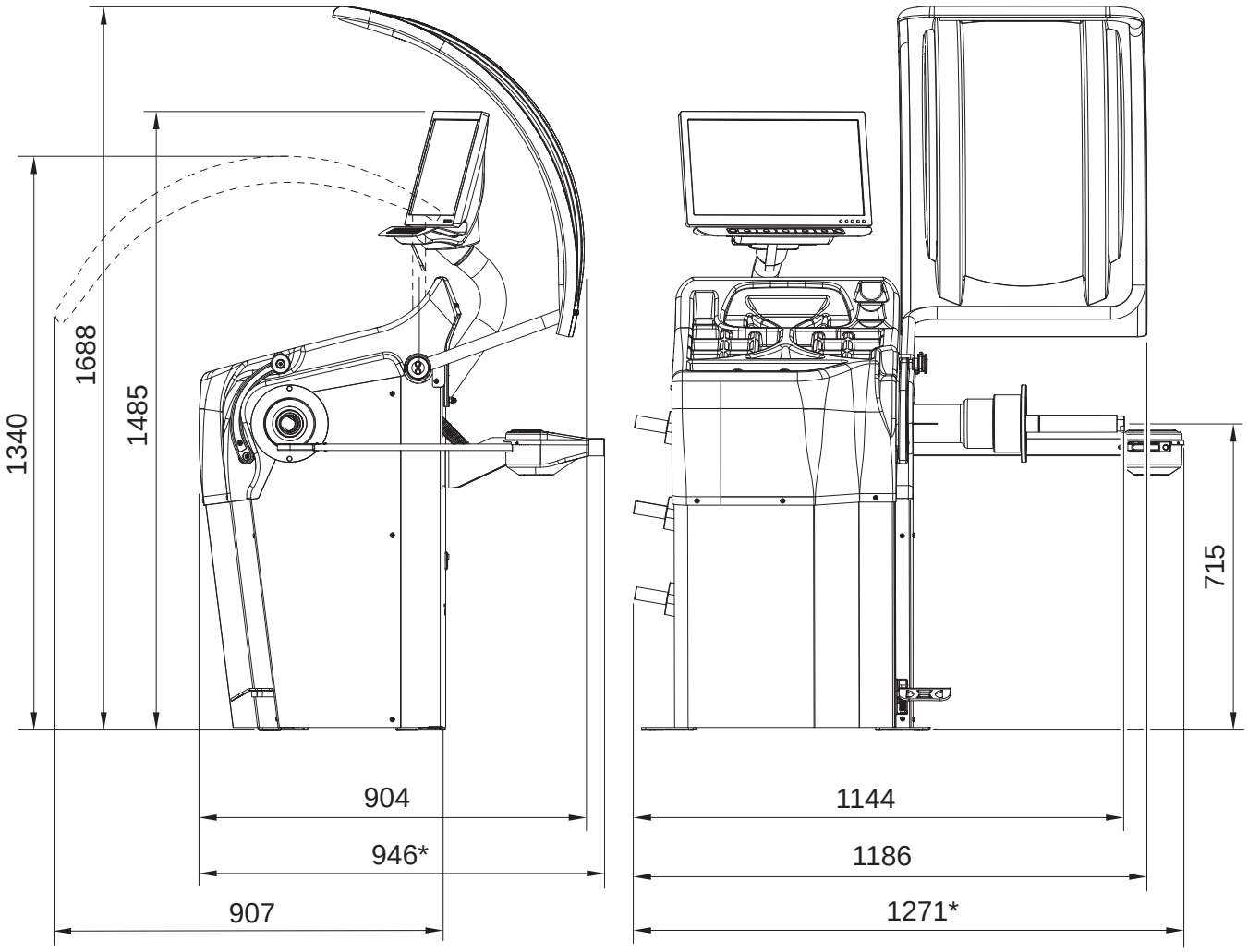

*** Only for LIBRAK355S and LIBRAK355PS versions**

19.0 STORING

If storing for long periods disconnect the main power supply and take measures to protect the machine from dust build-up. Lubricate parts that could be damaged from drying out.

20.0 SCRAPPING

When the decision is taken not to make further use of the machine, it is advisable to make it inoperative by removing the connection pressure hoses.
The machine is to be considered as special waste and should be dismantled into homogeneous parts.
Dispose of it in accordance with current legislation.

20.1 Instructions for the correct management of waste from electric and electronic equipment (in italian RAEE) according to legislative decree 151/05

- RAEE may not be disposed of as urban waste.
- These kinds of waste must be collected separately and taken to dedicated collection and recycling centres, according to OEM instructions and abiding by national laws.
- The above symbol on the product means that anyone wishing to dispose of the waste must follow the above-mentioned instructions.
- Any incorrect management of the waste or its parts or its abandonment outside dedicated areas could contaminate the environment, owing to the dangerous substances contained in it, and cause damage to human health, flora and fauna.
- National laws provide for sanctions against those responsible for illegal disposal or abandonment of waste from electric and electronic equipment.

Fig. 69

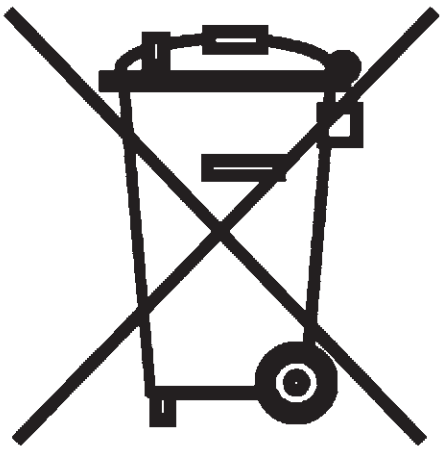

21.0 REGISTRATION PLATE DATA

The validity of the Conformity Declaration enclosed to this manual is also extended to products and/or devices the machine model object of the Conformity Declaration can be equipped with.

ATTENTION: DO NOT TAMPER WITH, CARVE, CHANGE OR REMOVE THE MACHINE IDENTIFICATION PLATE;DO NOT COVER IT WITH PANELS, ETC., SINCE IT MUST ALWAYS BE VISIBLE.

Said plate must always be kept clean from grase residues or filth generally.

WARNING: Should the plate be accidentally damaged (removed from the machine,damaged or even partially illegible) inform immediately the manufacturer.

22.0 FUNCTIONAL DIAGRAMS

Here follows a list of the machine functional diagrams.

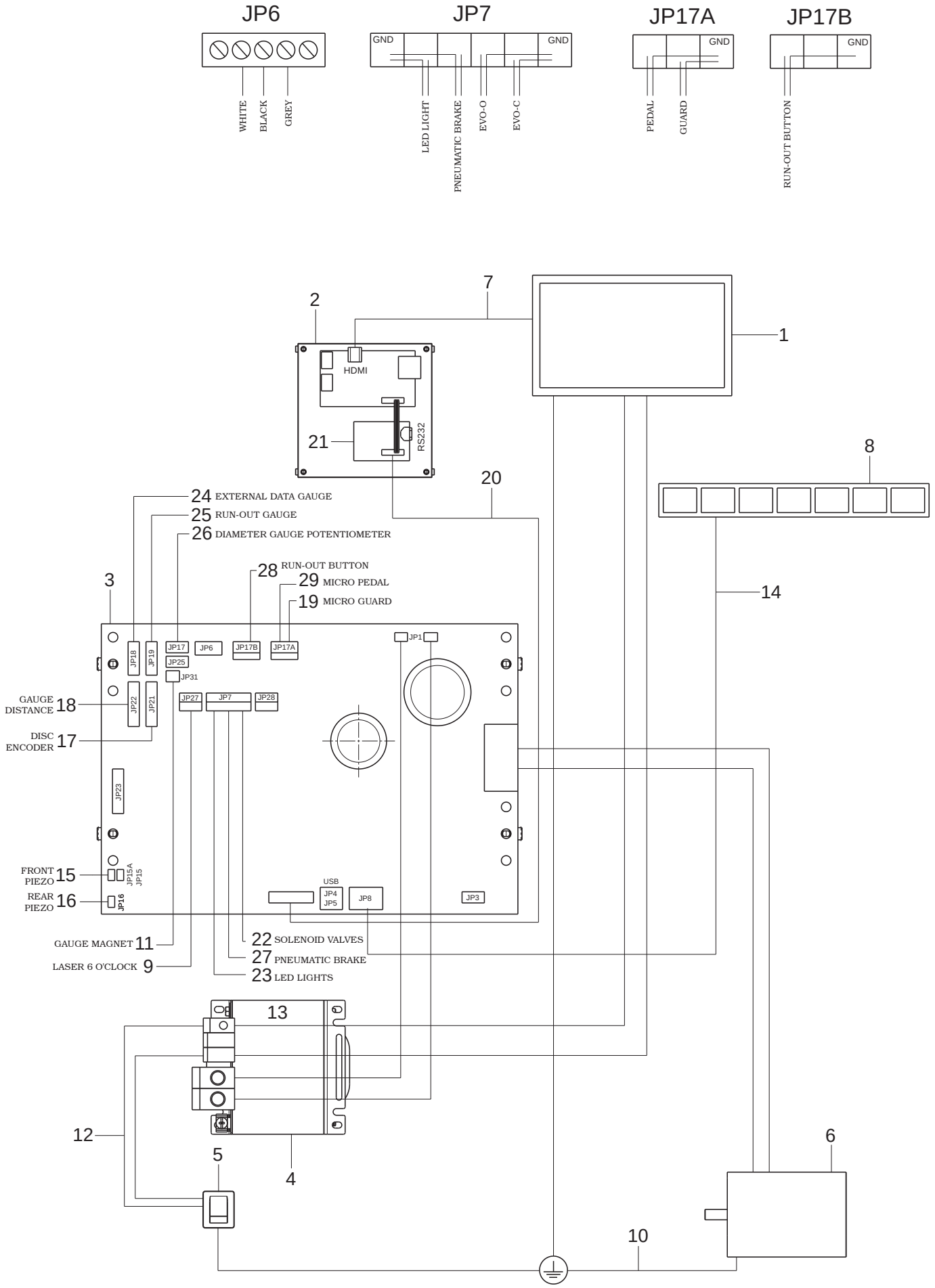
JP6
WHITE
BLACK
GREY
JP7
GND
GND
LED LIGHT
PNEUMATIC BRAKE
EVO-O
EVO-C
JP17A
GND
PEDAL
GUARD
JP17B
GND
RUN-OUT BUTTON
1
2
3
4
5
6
7
8
9
10
11
12
13
14
15
16
17
18
19
20
21
22
23
24
25
26
27
28
29
HDMI
RS232
24 EXTERNAL DATA GAUGE
25 RUN-OUT GAUGE
26 DIAMETER GAUGE POTENTIOMETER
28 RUN-OUT BUTTON
29 MICRO PEDAL
19 MICRO GUARD
GAUGE DISTANCE 18
DISC ENCODER 17
FRONT PIEZO 15
REAR PIEZO 16
GAUGE MAGNET 11
LASER 6 O'CLOCK 9
22 SOLENOID VALVES
27 PNEUMATIC BRAKE
23 LED LIGHTS
JP18
JP19
JP17
JP6
JP17B
JP17A
JP25
JP31
JP22
JP21
JP27
JP7
JP28
JP1
JP23
JP15A
JP15
JP16
USB
JP4
JP5
JP8
JP3

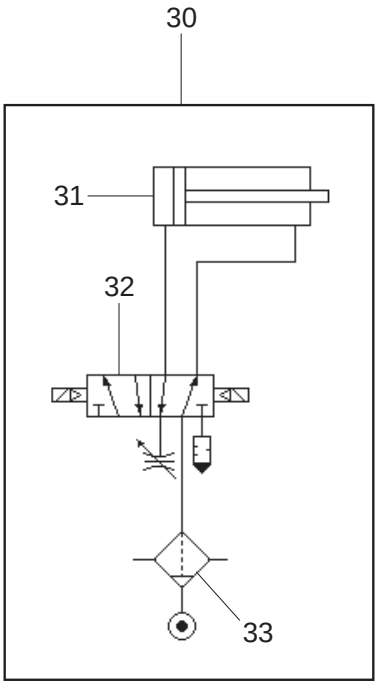

KEY

1 – Monitor 19”
2 – Monitor card kit
3 – 200W card not programmed
4 – Transformer
5 – Tilting switch
6 – DC motor
7 – HDMI cable
8 – Push-button panel with 7 keys
9 – Light
10 – Motor support ground cable
11 – Electromagnet
12 – Cable from switch to transformer
13 – Fuse
14 – Keyboard cables
15 – Front piezo cables
16 – Rear piezo cables
17 – Phonic wheel encoder cables
18 – Distance-diameter caliper cables
19 – Cable for wheel micro protection
20 – Power supply cable
21 – Card
22 – Cable for solenoid valve EVC
23 – Cable for solenoid valve EVO
24 – Potentiometer extension cable
25 – Ultrasound sensors extension cable
26 – Potentiometer with cable
27 – Cable for solenoid valve EVB
28 – Runout keyboard extension cable
29 – Cable for micro pedal
30 – Pneumatic tightening diagram (only for LIBRAK355P - 355PS)
31 – Tightening drive cylinder
32 – 5/2 NC solenoid valves
33 – Separating filter

Butler
ENGINEERING and MARKETING S.P.A.

1297-R008-0_B

LIBRAK355
LIBRAK355P
LIBRAK355S
LIBRAK355PS

I 23.0 LISTA DEI COMPONENTI

GB 23.0 LIST OF COMPONENTS

D 23.0 TEILELISTE

F 23.0 LISTE DES PIECES DETACHEES

E 23.0 LISTA DE PIEZAS

GLI ESPLOSI SERVONO SOLO PER L'IDENTIFICAZIONE DELLE PARTI DA SOSTITUIRE. LA SOSTITUZIONE DEVE ESSERE EFFETTUATA DA PERSONALE PROFESSIONALMENTE QUALIFICATO.

THE DIAGRAMS SERVE ONLY FOR THE IDENTIFICATION OF PARTS TO BE REPLACED. THE REPLACEMENT MUST BE CARRIED OUT PROFESSIONALLY QUALIFIED PERSONNEL.

DIE ZEICHNUNGEN DIENEN NUR ZUR IDENTIFIZIERUNG DER ERSATZTEILE. DIE ERSETZUNG MUSS DURCH QUALIFIZIERTES PERSONAL ERFOLGEN.

LES DESSINS NE SERVENT QU'À L'IDENTIFICATION DES PIÈCES À REMPLACER. LE REMPLACEMENT DOIT ÊTRE EFFECTUÉ PAR UN PERSONNE PROFESSIONNELLEMENT QUALIFIÉ.

LOS DIBUJOS EN DESPIECE SIRVEN ÚNICAMENTE PARA IDENTIFICAR LAS PIEZAS QUE DEBEN SUSTITUIRSE. LA SUSTITUCIÓN DE PIEZAS DEBE EFECTUARLA EXCLUSIVAMENTE PERSONAL PROFESIONALMENTE CUALIFICADO.

- Per eventuali chiarimenti interpellare il più vicino rivenditore oppure rivolgersi direttamente a:
- For any further information please contact your local dealer or call:
- Im Zweifelsfall ober bei Rückfragen wenden Sie sich bitte an den nächsten Wiederverkäufer oder direkt an:
- Pour tout renseignement complémentaire s'adresser au revendeur le Plus proche ou directement à:
- En caso de dudas, para eventuales aclaraciones, póngase en contacto con el distribudor más próximo ó diríjasie directamente a:

BUTLER ENGINEERING and MARKETING S.p.A. a s. u.
Via dell'Ecologia, 6 - 42047 Rolo - (RE) Italy
Phone (+39) 0522 647911 - Fax (+39) 0522 649760 - e-mail: Info@butler.it

1297-R008-0_B - Rev. n. 0 (05/2014)

SOMMARIO - SUMMARY - INHALT
SOMMAIRE - SUMARIO

Tavola N°1 - Rev. 0 ____ 3
ASSIEME GENERALE
MAIN ASSEMBLY
GENERALSATZ
ASSEMBLAGE GENERAL
JUNTO GENERAL

Tavola N°2 - Rev. 0 ____ 129690073 5
GRUPPO MOTORE
MOTOR UNIT
MOTORSATZ
GROUPE MOTEUR
GRUPO MOTOR

Tavola N°3A - Rev. 0 __ 129690090 6
GRUPPO ROTANTE COMPLETO
COMPLETE ROTARY UNIT
KOMPLETTER ROTIERENDER SATZ
GROUPE ROTATIF COMPLET
GRUPO GIRATORIO COMPLETO

Tavola N°3B - Rev. 0 __ 129690030 7
GRUPPO ROTANTE COMPLETO
COMPLETE ROTARY UNIT
KOMPLETTER ROTIERENDER SATZ
GROUPE ROTATIF COMPLET
GRUPO GIRATORIO COMPLETO

Tavola N°4 - Rev. 0 ____ 129690292 8
GRUPPO FRENO
BRAKE UNIT
BREMSATZ
GROUPE FREIN
GRUPO FRENO

Tavola N°5 - Rev. 0 ____ 129791630 9
GRUPPO TELAIO
FRAME UNIT
RAHMENSATZ
GROUPE CHASSIS
GRUPO ESTRUCTURA

Tavola N°6 - Rev. 0 ____ 129791710 10
GRUPPO PLANCIA
BOARD UNIT
BRETTSATZ
GROUPE PLANCHE
GRUPO TABLERO

Tavola N°7 - Rev. 0 ____ 129791750 11
GRUPPO CALIBRO
TESTER UNIT
KALIBERSATZ
GROUPE CALIBRE
GRUPO CALIBRE

Tavola N°8 - Rev. 0 ____ 129791780 12
GRUPPO AZIONAMENTO FRENO
BRAKE OPERATION GROUP
SATZ FÜR BREMSBETÄTIGUNG
GROUPE ACTIONNEMENT FREIN
GRUPO ACCIONAMIENTO FRENO

Tavola N°9A - Rev. 0 __ 129792260 13
GRUPPO PEDALE
PEDAL UNIT
PEDALSATZ
GROUPE PÉDAL
GRUPO PEDAL

Tavola N°9B - Rev. 0 __ 129791400 14
GRUPPO PEDALE MICRO
MICRO PEDAL UNIT
MIKRO PEDALSATZ
GROUPE PÉDAL MICRO
GRUPO PEDAL MICRO

Tavola N°10 - Rev. 0 __ 129792330 15
GRUPPO ELETTRONICA
ELECTRONICS UNIT
ELEKTRONIKSATZ
GROUPE ÉLECTRONIQUE
GRUPO ELECTRÓNICA

Tavola N°11 - Rev. 0 __ 129792390 16
GRUPPO IMPIANTO ELETTRICO
ELECTRICAL SYSTEM UNIT
SATZ VON ELEKTROANLAGE
GROUPE INSTALLATION ÉLECTRIQUE
GRUPO INSTALACIÓN ELÉCTRICA

Tavola N°12 - Rev. 0 __ 129390311 17
IMPIANTO SERRAGGIO PNUEMATICO
PNEUMATIC TIGHTENING SYSTEM
ANLAGE FÜR PNEUMATISCHE AUFSPANNUNG
SYSTÈME SERRAGE PNEUMATIQUE
SISTEMA APRIETE NEUMÁTICO

Tavola N°13 - Rev. 0 __ 129791580 18
GRUPPO PROTEZIONE RUOTA
WHEEL PROTECTION UNIT
SATZ FÜR RADSCHUTZ
GROUPE PROTECTION ROUE
GRUPO PROTECCIÓN RUEDA

Tavola N°14A - Rev. 0 _ 19
DOTAZIONE A
A EQUIPMENT
AUSSTATTUNG A
DOTATION A
DOTACION A

Tavola N°14B - Rev. 0 _ 20
DOTAZIONE B
B EQUIPMENT
AUSSTATTUNG B
DOTATION B
DOTACION B

Tavola N°14C - Rev. 0 _ 21
DOTAZIONE C
C EQUIPMENT
AUSSTATTUNG C
DOTATION C
DOTACION C

Tavola N°14D - Rev. 0 _ 22
DOTAZIONE D
D EQUIPMENT
AUSSTATTUNG D
DOTATION D
DOTACION D

Tavola N°15 - Rev. 0 __ 129791550 23
CALIBRO LARGHEZZA PROFESSIONALE
PROFESSIONAL EXTERNAL DATA GAUGE
BERUFLICHE BREITENLEHRE
CALIBRE LARGEUR PROFESSIONEL
CALIBRE ANCHO PROFESIONAL

Tavola N°16 - Rev. 0 __ 129590720 24
CALIBRO LARGHEZZA
WIDTH CALIPER
KALIBER FÜR BREITE
CALIBRE LARGEUR
CALIBRE ANCHO

Tavola N°17 - Rev. 0 __ 129790110 25
GRUPPO LASER FISSO + ILLUMINATORE
FIXED LASER + LIGHTING DEVICE UNIT
FESTLASER + BELEUCHTUNG SATZ
GROUPE LASER FIXE + DISPOSITIF D'ÉCLAIRAGE
GRUPO LASER FIJO + ILUMINADOR

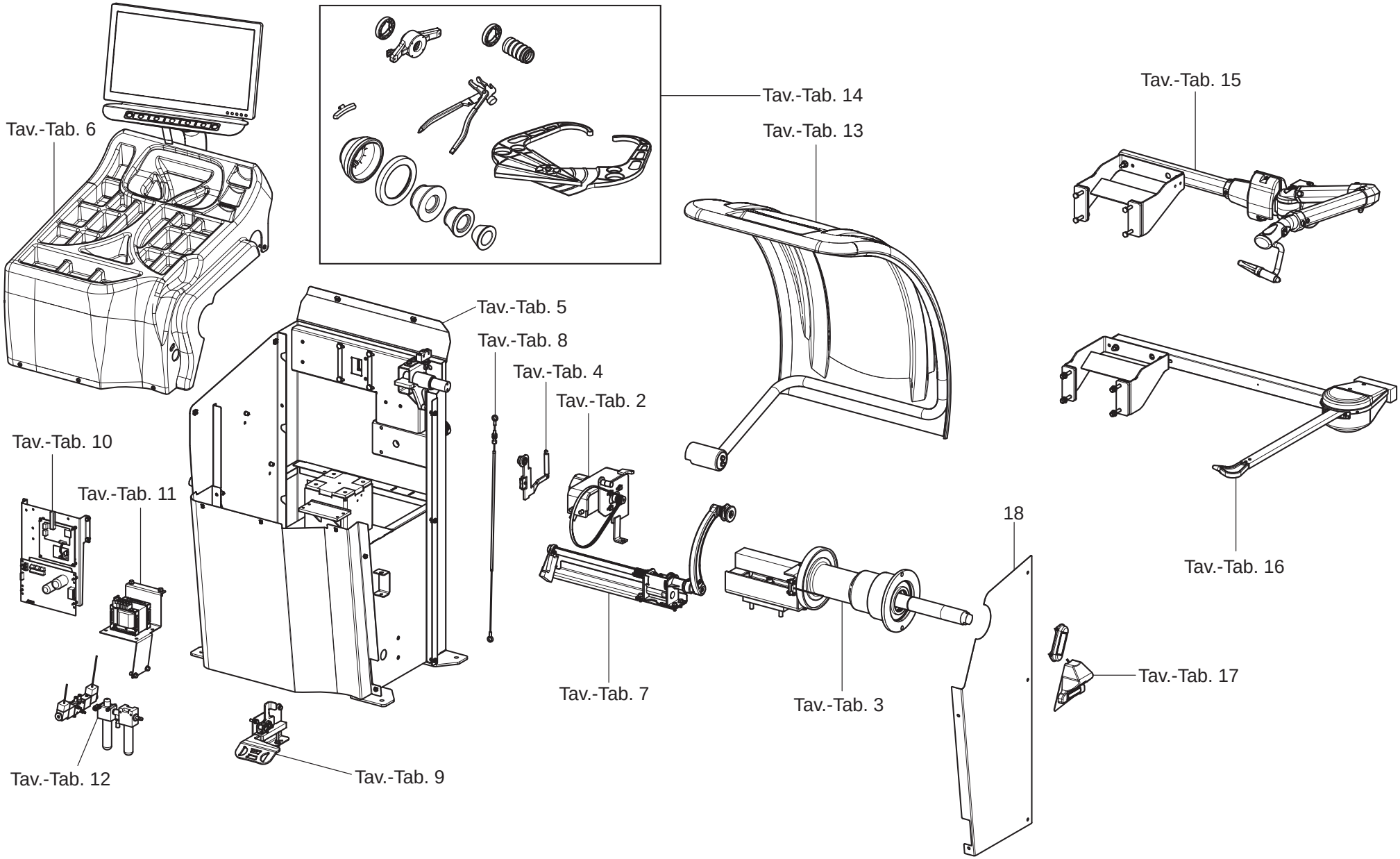

Butler ENGINEERING and MARKETING S.P.A.	**LISTA DEI COMPONENTI - LIST OF COMPONENTS - TEILELISTE** **LISTE DES PIECES DETACHEES - LISTA DE PIEZAS**	*ASSIEME GENERALE* *MAIN ASSEMBLY* *GENERALSATZ* *ASSEMBLAGE GENERAL* *JUNTO GENERAL*	***Pag. 3 di 25***
	Tavola N°1 - Rev. 0		**LIBRAK355 - LIBRAK355P** **LIBRAK355S - LIBRAK355PS**

Tav.	Cod.	Pos.	LIBRAK355	LIBRAK355P	LIBRAK355S	LIBRAK355PS		
2	129690073		●	●	●	●		
3A	129690090		●		●			
3B	129690030			●		●		
4	129690292		●	●	●	●		
5	129791630		●	●	●	●		
6	129791710		●	●	●	●		
7	129791750		●	●	●	●		
8	129791780		●	●	●	●		
9A	129792260		●		●			
9B	129791400			●		●		
10	129792330		●	●	●	●		
11	129792390		●	●	●	●		
12	129390311			●		●		
13	129791580		●	●	●	●		
14A	-		●					
14B	-			●				
14C	-				●			
14D	-					●		
15	129791550		OPT	OPT	OPT	OPT		
16	129590720		OPT	OPT	●	●		
17	129790110				●	●		
	129715750	18A	●	●				
	129715600	18B			●	●		

OPT = OPTIONAL

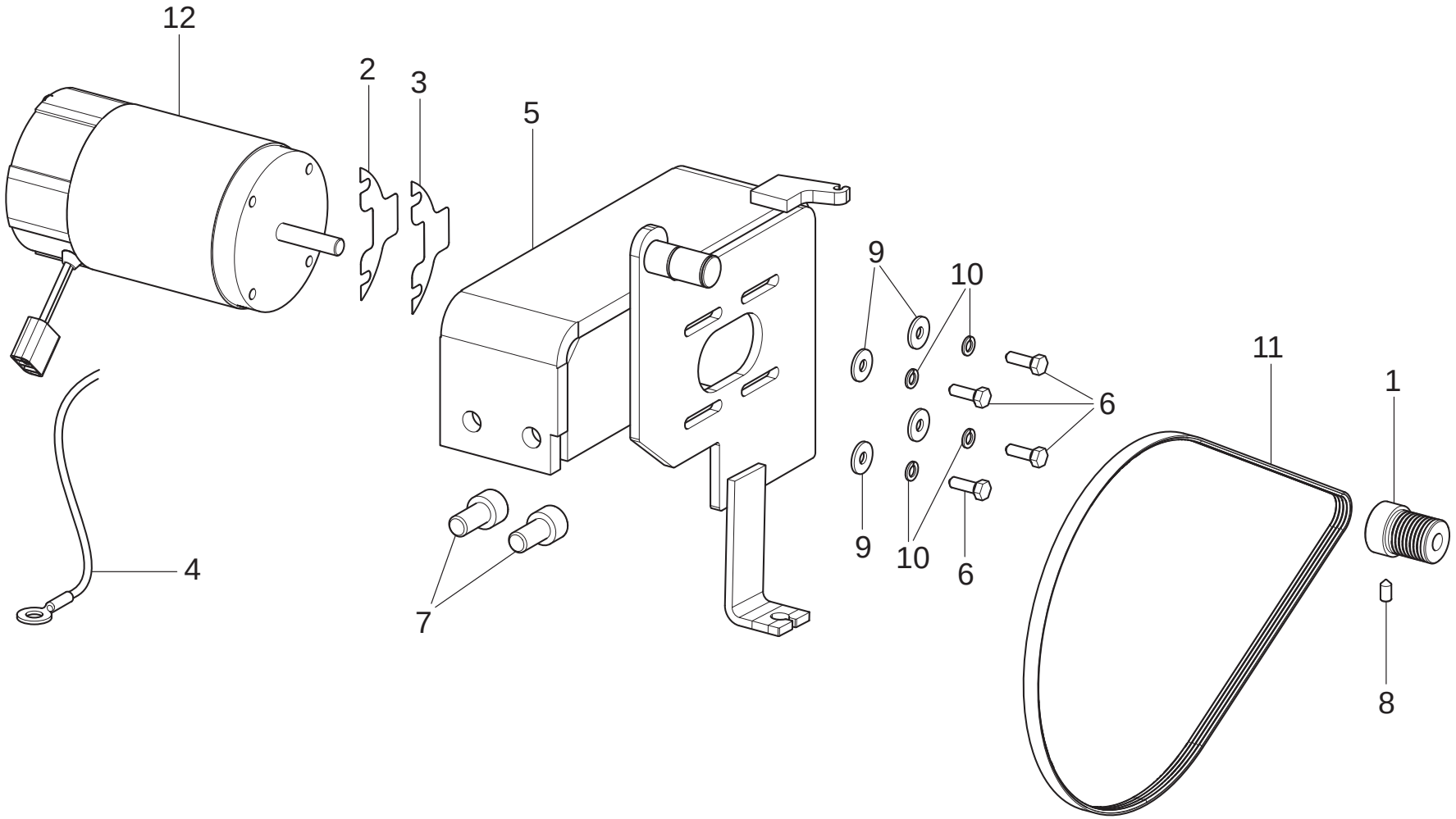

LIBRAK355	LIBRAK355P	LIBRAK355S	LIBRAK355PS
•	•	•	•

Butler ENGINEERING and MARKETING S.P.A.	LISTA DEI COMPONENTI - LIST OF COMPONENTS - TEILELISTE LISTE DES PIECES DETACHEES - LISTA DE PIEZAS	GRUPPO MOTORE MOTOR UNIT MOTORSATZ GROUPE MOTEUR GRUPO MOTOR	Pag. 5 di 25
	Tavola N°2 - Rev. 0 / 129690073		

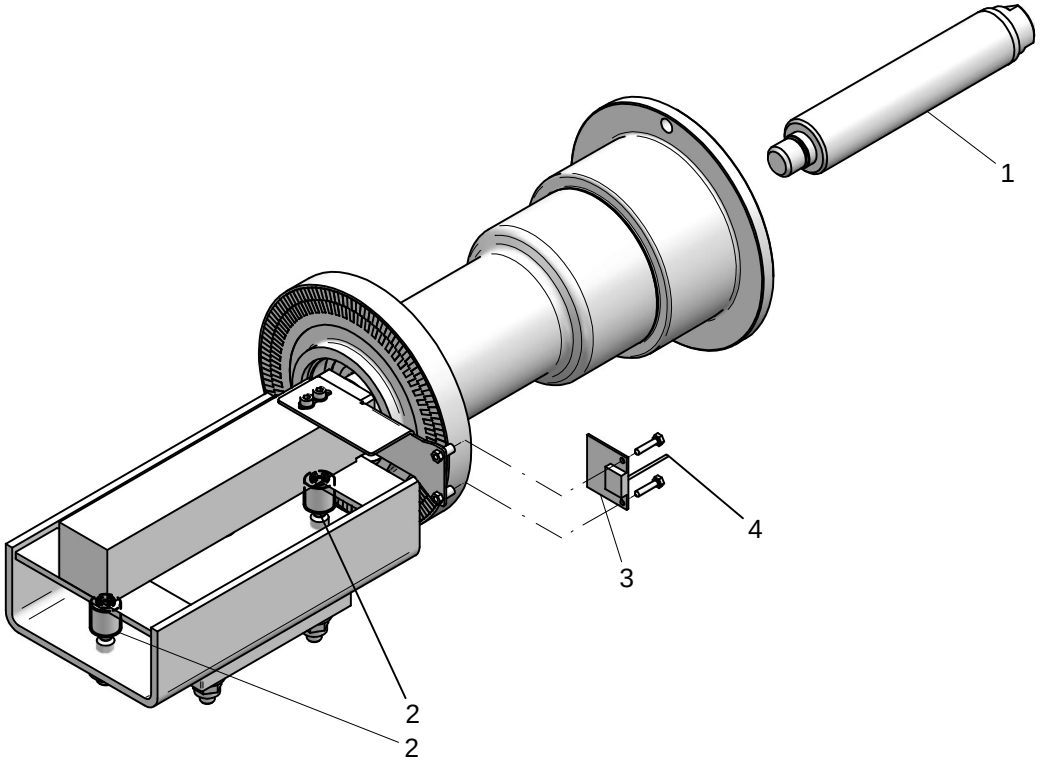

LIBRAK355	LIBRAK355P	LIBRAK355S	LIBRAK355PS
•		•	

Butler ENGINEERING and MARKETING S.P.A.	LISTA DEI COMPONENTI - LIST OF COMPONENTS - TEILELISTE LISTE DES PIECES DETACHEES - LISTA DE PIEZAS	GRUPPO ROTANTE COMPLETO COMPLETE ROTARY UNIT KOMPLETTER ROTIERENDER SATZ GROUPE ROTATIF COMPLET GRUPO GIRATORIO COMPLETO	Pag. 6 di 25
	Tavola N°3A - Rev. 0 / 129690090		

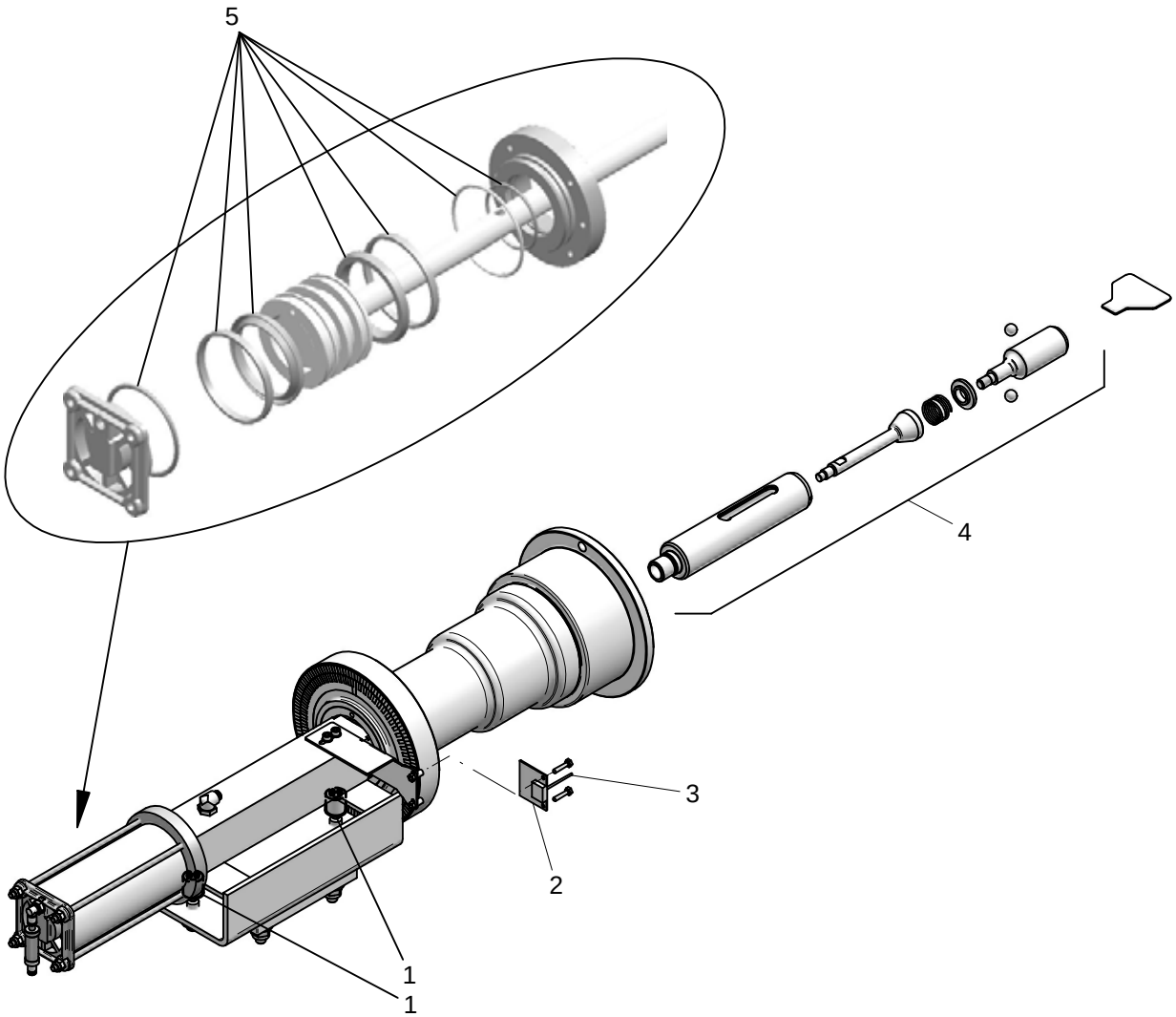

LIBRAK355	LIBRAK355P	LIBRAK355S	LIBRAK355PS
	•		•

Butler ENGINEERING and MARKETING S.P.A.	LISTA DEI COMPONENTI - LIST OF COMPONENTS - TEILELISTE LISTE DES PIECES DETACHEES - LISTA DE PIEZAS	GRUPPO ROTANTE COMPLETO COMPLETE ROTARY UNIT KOMPLETTER ROTIERENDER SATZ GROUPE ROTATIF COMPLET GRUPO GIRATORIO COMPLETO	Pag. 7 di 25
	Tavola N°3B - Rev. 0 / 129690030		

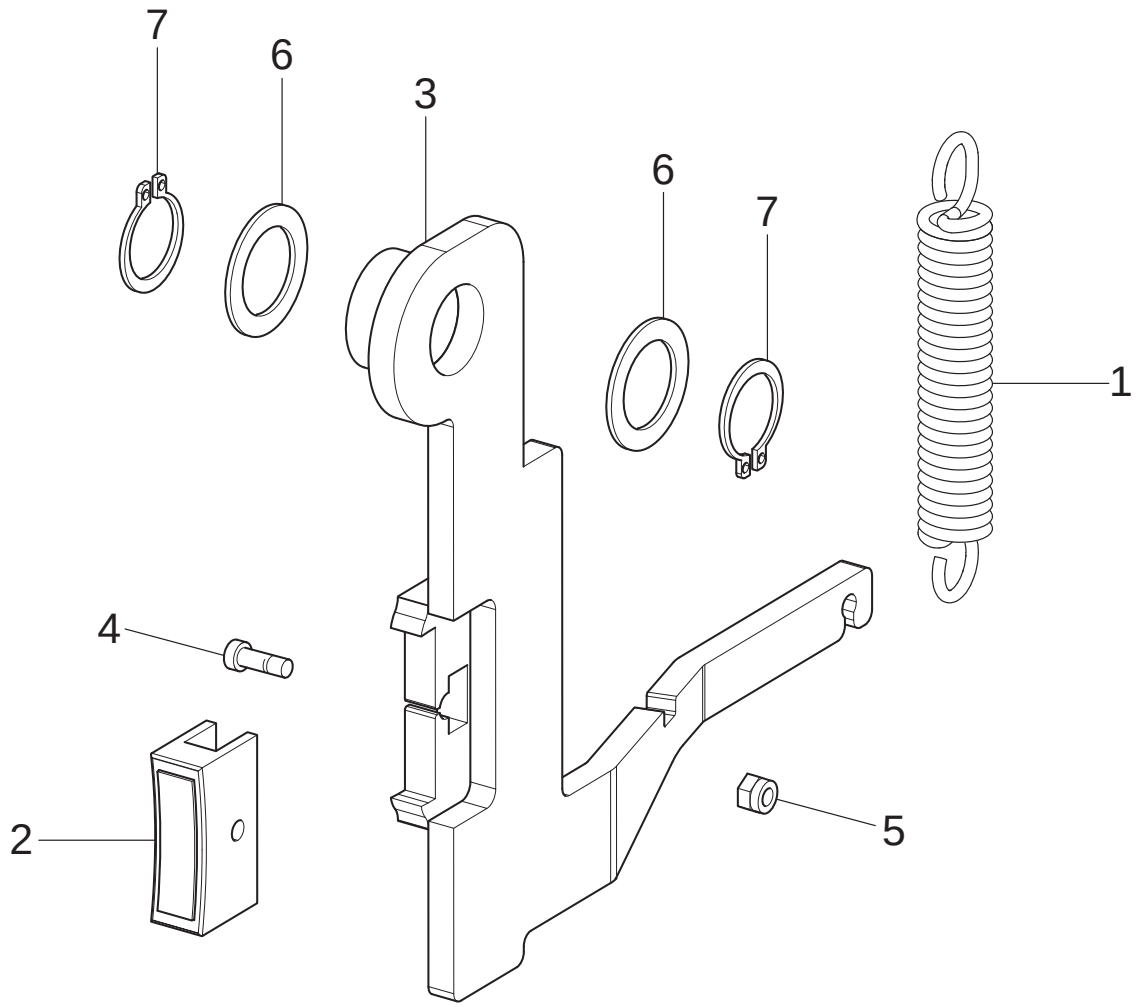

LIBRAK355	LIBRAK355P	LIBRAK355S	LIBRAK355PS
•	•	•	•

Butler ENGINEERING and MARKETING S.P.A.	LISTA DEI COMPONENTI - LIST OF COMPONENTS - TEILELISTE LISTE DES PIECES DETACHEES - LISTA DE PIEZAS	GRUPPO FRENO BRAKE UNIT BREMSATZ GROUPE FREIN GRUPO FRENO	Pag. 8 di 25
	Tavola N°4 - Rev. 0 / 129690292		

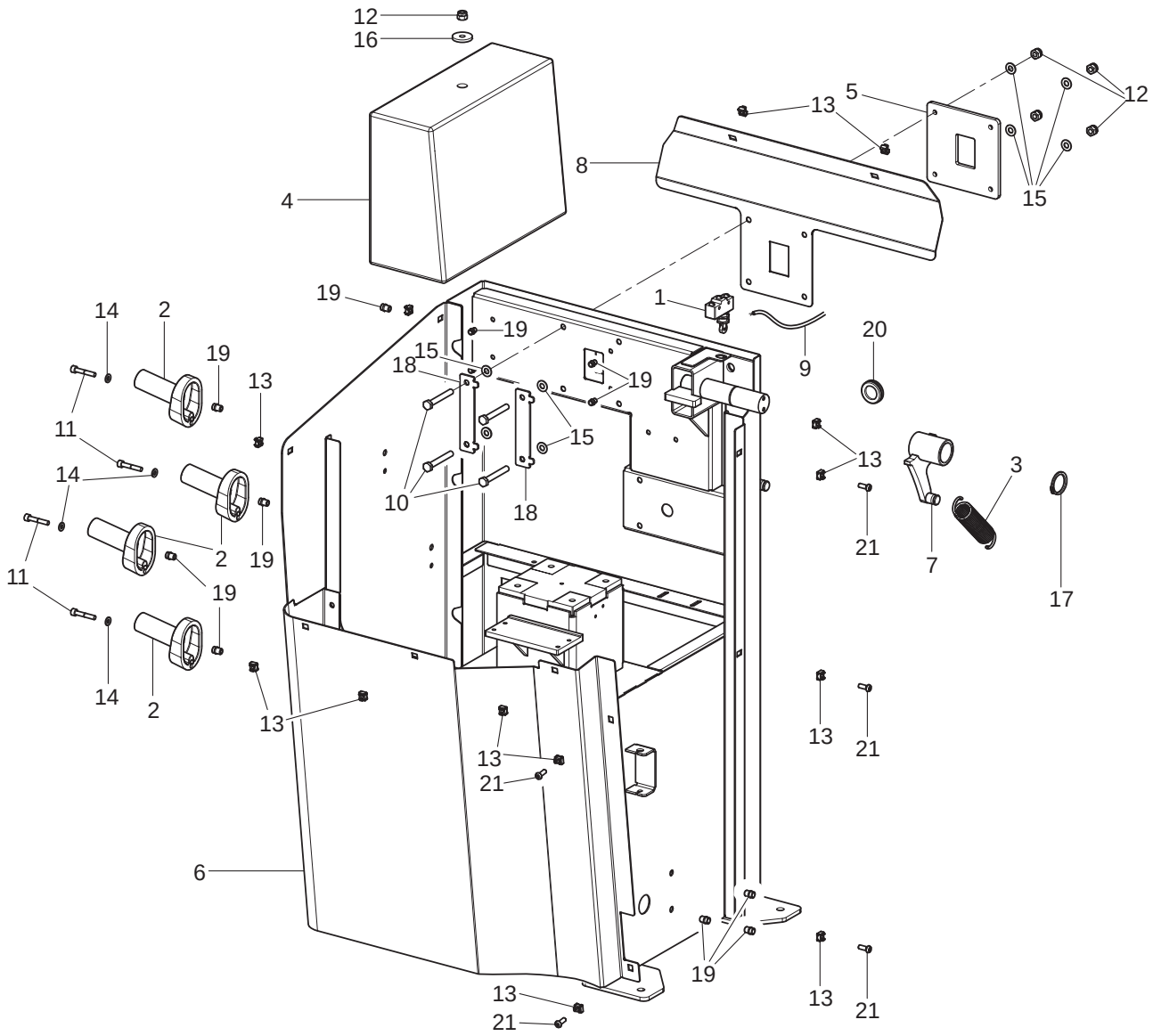

LIBRAK355	LIBRAK355P	LIBRAK355S	LIBRAK355PS
●	●	●	●

Butler ENGINEERING and MARKETING S.P.A.

LISTA DEI COMPONENTI - LIST OF COMPONENTS - TEILELISTE
LISTE DES PIECES DETACHEES - LISTA DE PIEZAS

Tavola N°5 - Rev. 0 | **129791630**

GRUPPO TELAIO
FRAME UNIT
RAHMENSATZ
GROUPE CHASSIS
GRUPO ESTRUCTURA

1297-R008-0_B

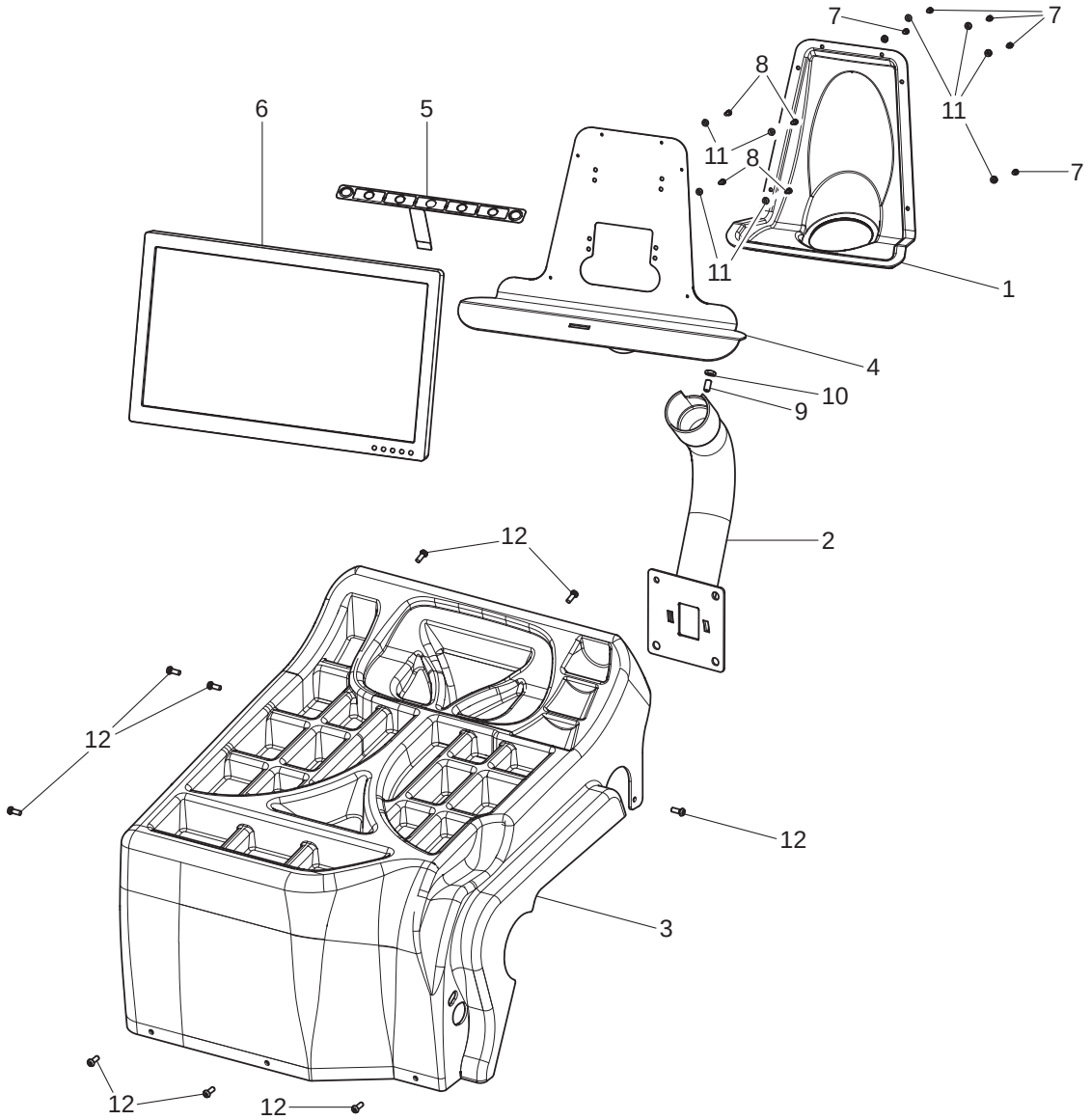

LIBRAK355	LIBRAK355P	LIBRAK355S	LIBRAK355PS
●	●	●	●

Butler ENGINEERING and MARKETING S.P.A.	LISTA DEI COMPONENTI - LIST OF COMPONENTS - TEILELISTE LISTE DES PIECES DETACHEES - LISTA DE PIEZAS	GRUPPO PLANCIA BOARD UNIT BRETTSATZ GROUPE PLANCHE GRUPO TABLERO	Pag. 10 di 25
	Tavola N°6 - Rev. 0 / 129791710		

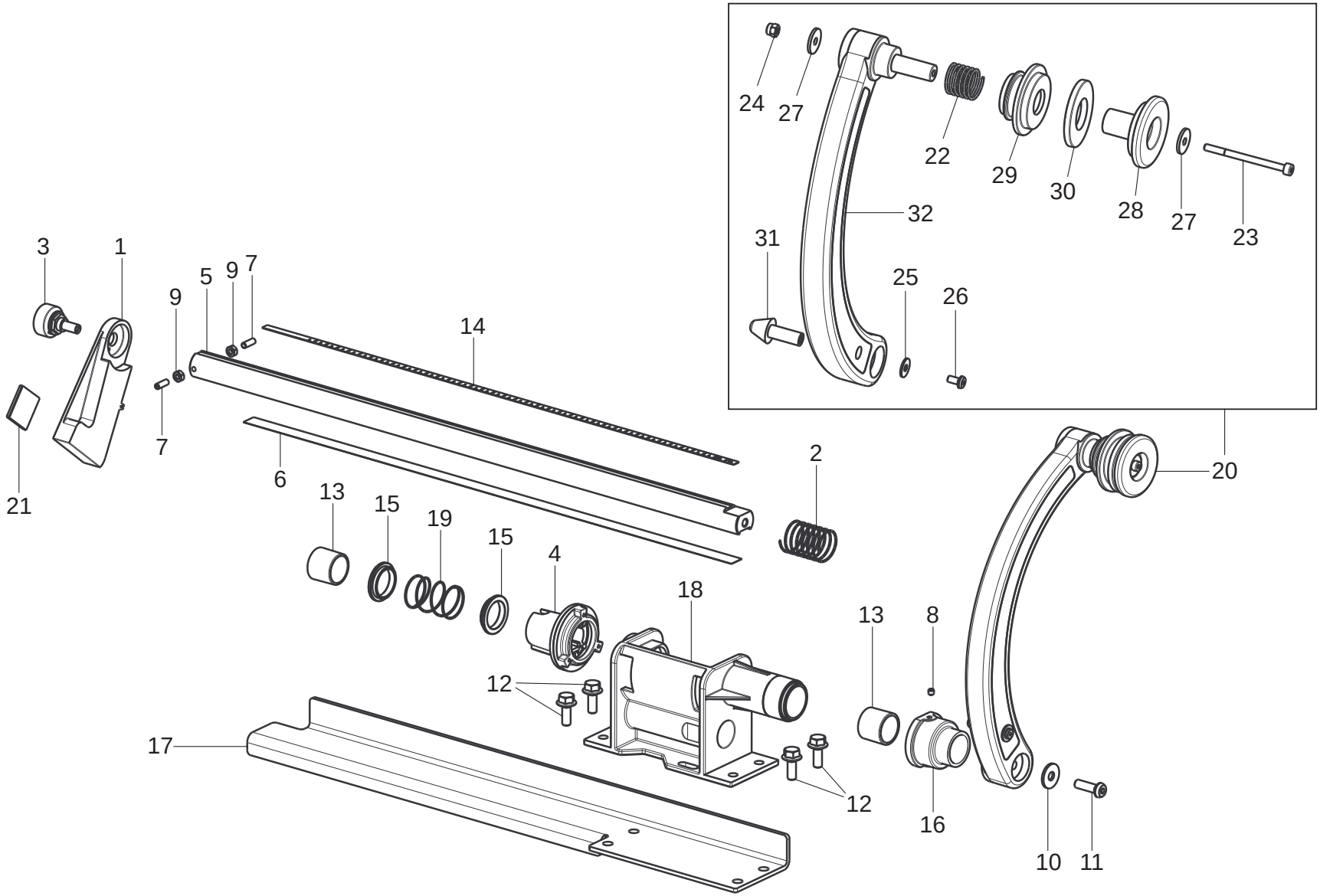

LIBRAK355	LIBRAK355P	LIBRAK355S	LIBRAK355PS
•	•	•	•

Butler ENGINEERING and MARKETING S.P.A.	LISTA DEI COMPONENTI - LIST OF COMPONENTS - TEILELISTE LISTE DES PIECES DETACHEES - LISTA DE PIEZAS	GRUPPO CALIBRO TESTER UNIT KALIBERSATZ GROUPE CALIBRE GRUPO CALIBRE	Pag. 11 di 25
	Tavola N°7 - Rev. 0 / 129791750		

1297-R008-0_B

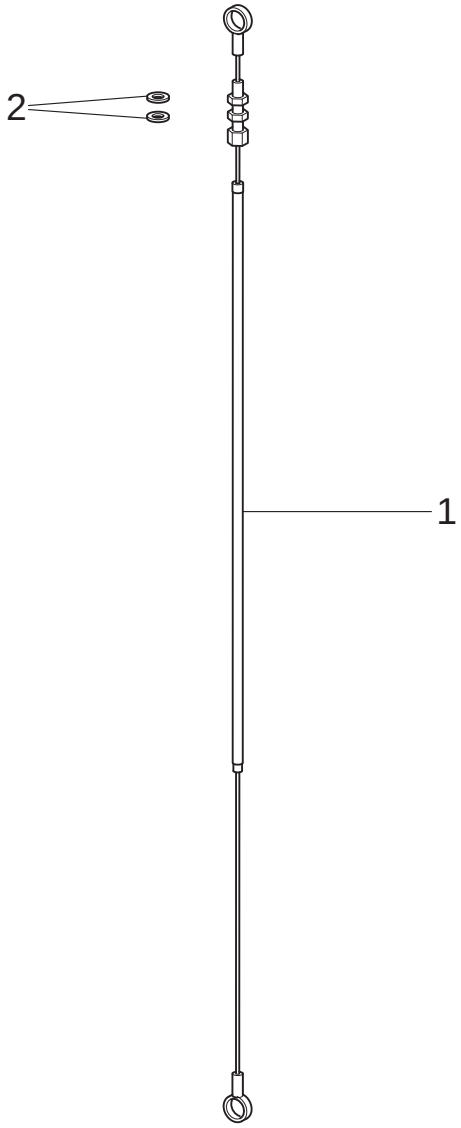

LIBRAK355	LIBRAK355P	LIBRAK355S	LIBRAK355PS
•	•	•	•

Butler ENGINEERING and MARKETING S.P.A.	LISTA DEI COMPONENTI - LIST OF COMPONENTS - TEILELISTE LISTE DES PIECES DETACHEES - LISTA DE PIEZAS	GRUPPO AZIONAMENTO FRENO BRAKE OPERATION GROUP SATZ FÜR BREMSBETÄTIGUNG GROUPE ACTIONNEMENT FREIN GRUPO ACCIONAMIENTO FRENO	*Pag. 12 di 25*
	Tavola N°8 - Rev. 0 / 129791780		

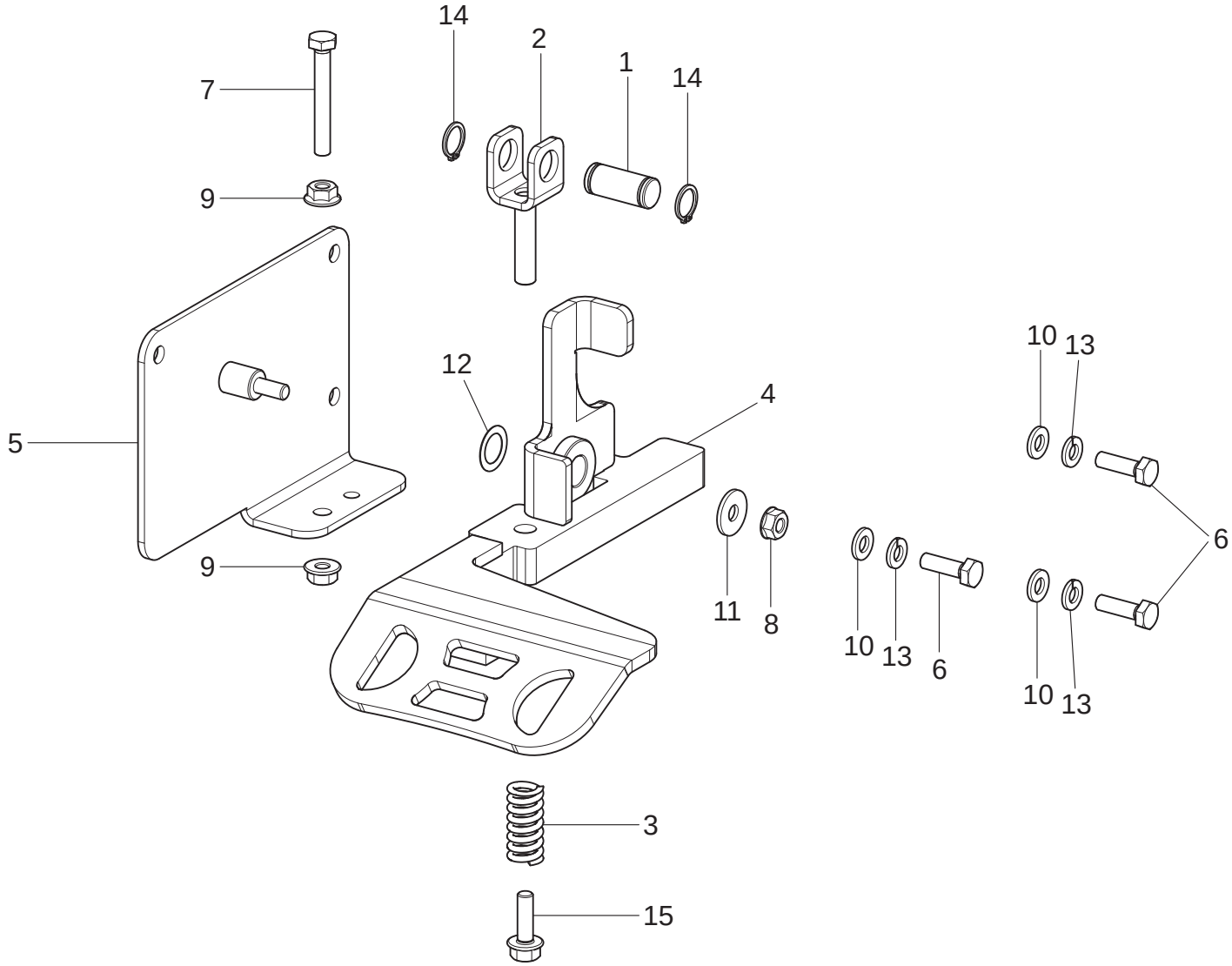

LIBRAK355	LIBRAK355P	LIBRAK355S	LIBRAK355PS
•		•	

Butler ENGINEERING and MARKETING S.P.A.	LISTA DEI COMPONENTI - LIST OF COMPONENTS - TEILELISTE LISTE DES PIECES DETACHEES - LISTA DE PIEZAS	GRUPPO PEDALE PEDAL UNIT PEDALSATZ GROUPE PÉDAL GRUPO PEDAL	Pag. 13 di 25
	Tavola N°9A - Rev. 0 / 129792260		

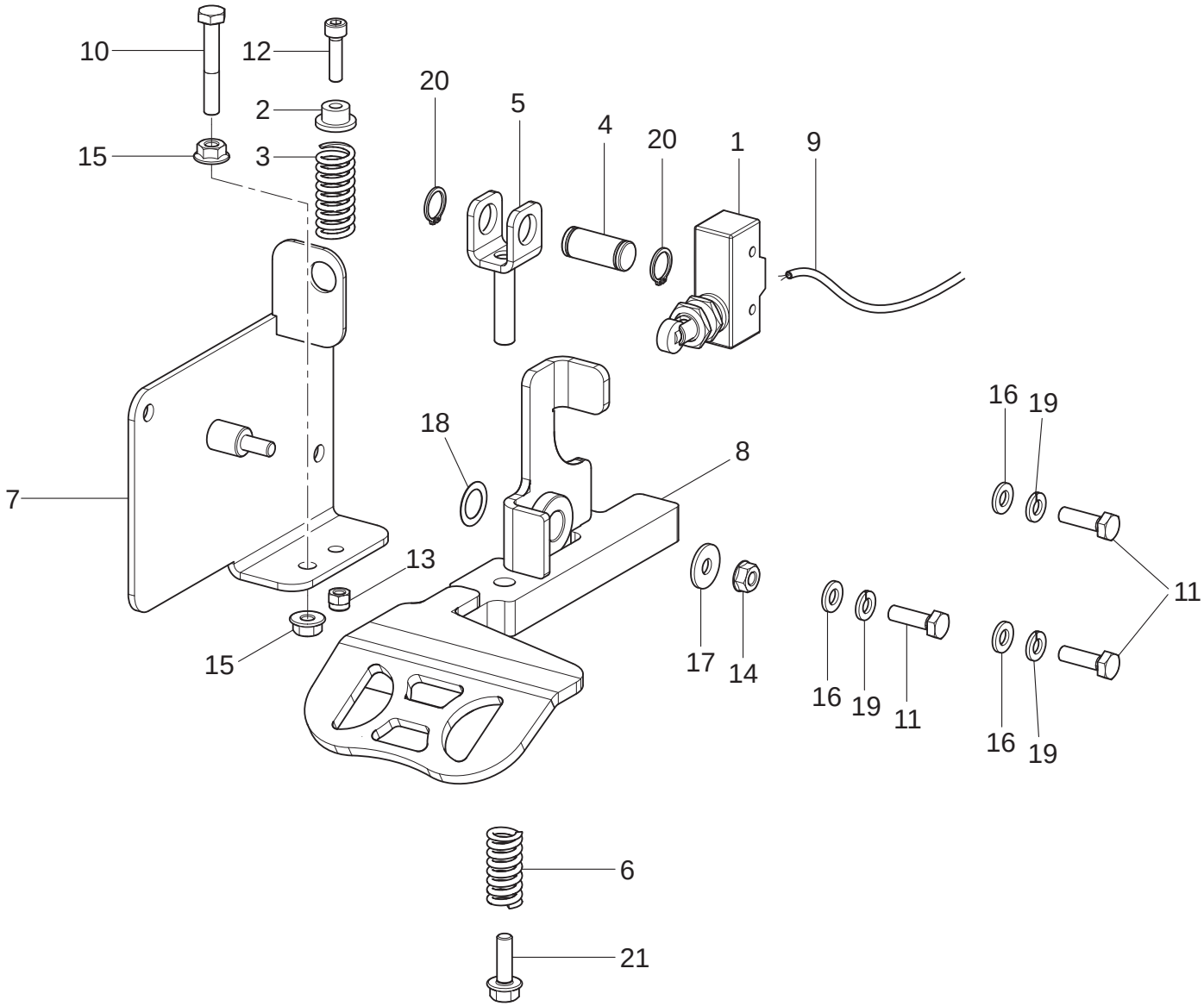

LIBRAK355	LIBRAK355P	LIBRAK355S	LIBRAK355PS
	•		•

Butler ENGINEERING and MARKETING S.P.A.	LISTA DEI COMPONENTI - LIST OF COMPONENTS - TEILELISTE LISTE DES PIECES DETACHEES - LISTA DE PIEZAS	GRUPPO PEDALE MICRO MICRO PEDAL UNIT MIKRO PEDALSATZ GROUPE PÉDAL MICRO GRUPO PEDAL MICRO	Pag. 14 di 25
	Tavola N°9B - Rev. 0 / 129791400		

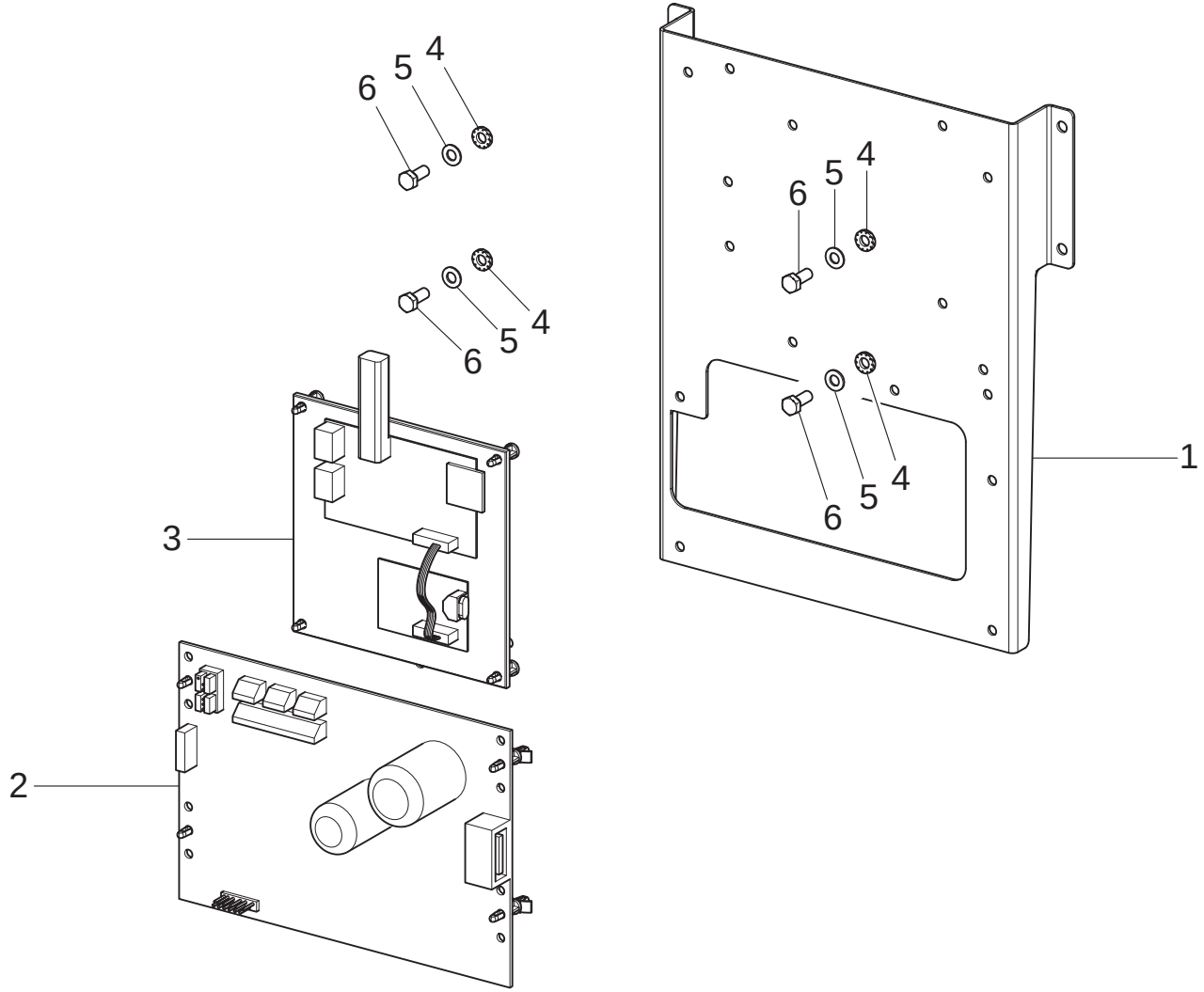

LIBRAK355	LIBRAK355P	LIBRAK355S	LIBRAK355PS
•	•	•	•

Butler ENGINEERING and MARKETING S.P.A.	LISTA DEI COMPONENTI - LIST OF COMPONENTS - TEILELISTE LISTE DES PIECES DETACHEES - LISTA DE PIEZAS	GRUPPO ELETTRONICA ELECTRONICS UNIT ELEKTRONIKSATZ GROUPE ÉLECTRONIQUE GRUPO ELECTRÓNICA	Pag. 15 di 25
	Tavola N°10 - Rev. 0 / 129792330		

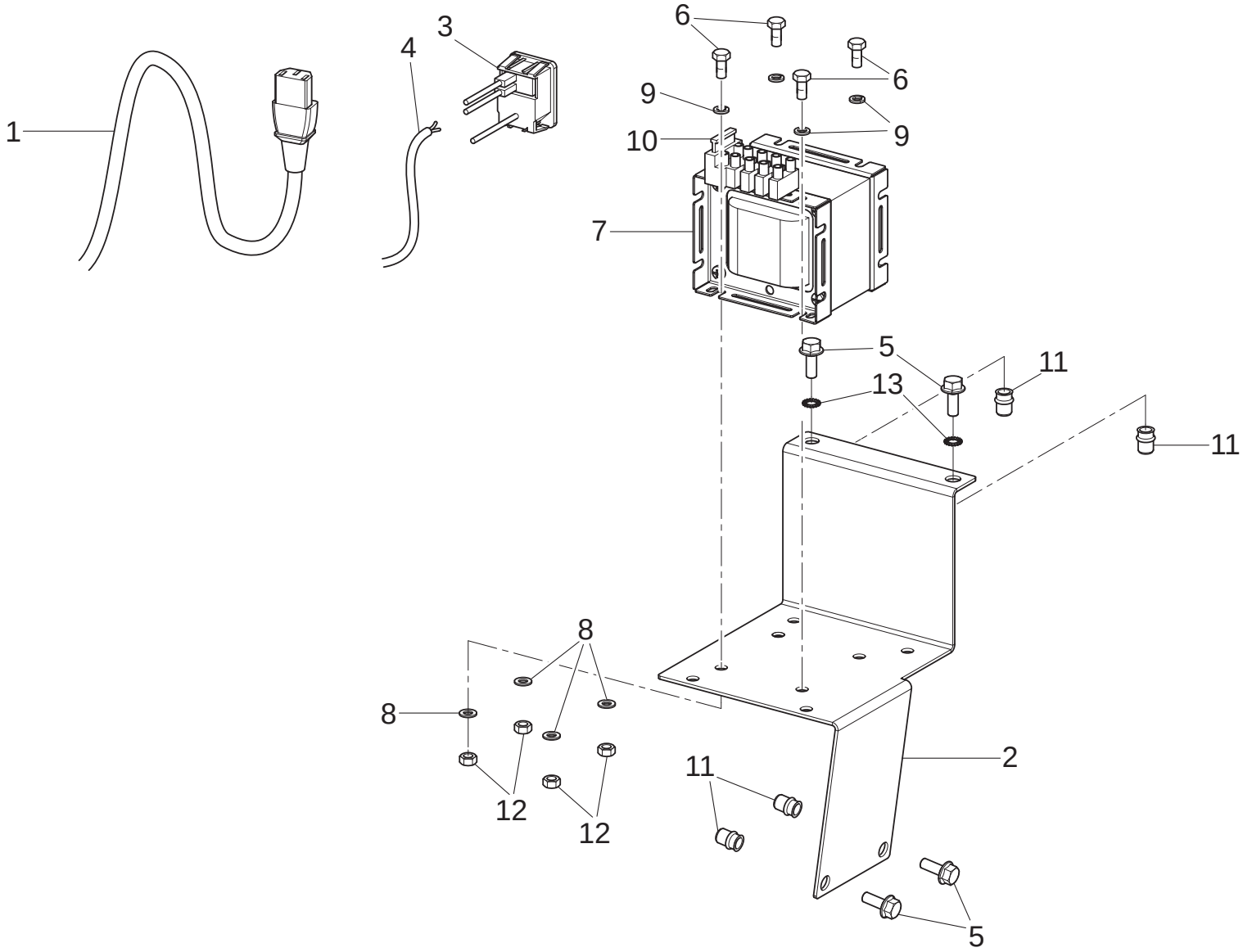

LIBRAK355	LIBRAK355P	LIBRAK355S	LIBRAK355PS
•	•	•	•

Butler ENGINEERING and MARKETING S.P.A.	LISTA DEI COMPONENTI - LIST OF COMPONENTS - TEILELISTE LISTE DES PIECES DETACHEES - LISTA DE PIEZAS	GRUPPO IMPIANTO ELETTRICO ELECTRICAL SYSTEM UNIT SATZ VON ELEKTROANLAGE GROUPE INSTALLATION ÉLECTRIQUE GRUPO INSTALACIÓN ELÉCTRICA	Pag. 16 di 25
	Tavola N°11 - Rev. 0 / 129792390		

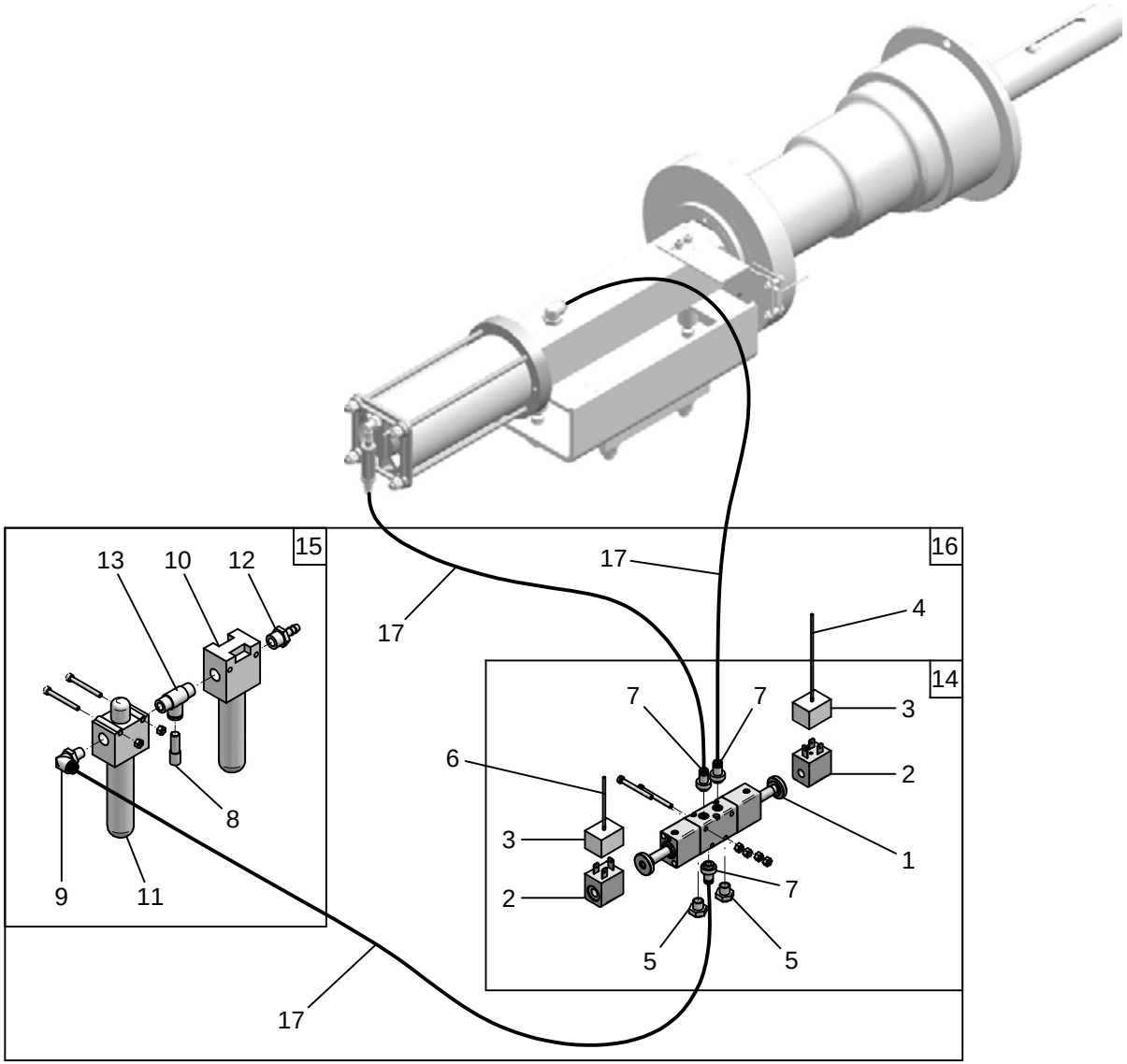

LIBRAK355	LIBRAK355P	LIBRAK355S	LIBRAK355PS
	•		•

Butler ENGINEERING and MARKETING S.P.A.	LISTA DEI COMPONENTI - LIST OF COMPONENTS - TEILELISTE LISTE DES PIECES DETACHEES - LISTA DE PIEZAS	IMPIANTO SERRAGGIO PNUEMATICO PNEUMATIC TIGHTENING SYSTEM ANLAGE FÜR PNEUMATISCHE AUFSPANNUNG SYSTÈME SERRAGE PNEUMATIQUE SISTEMA APRIETE NEUMÁTICO	Pag. 17 di 25
	Tavola N°12 - Rev. 0 / 129390311		

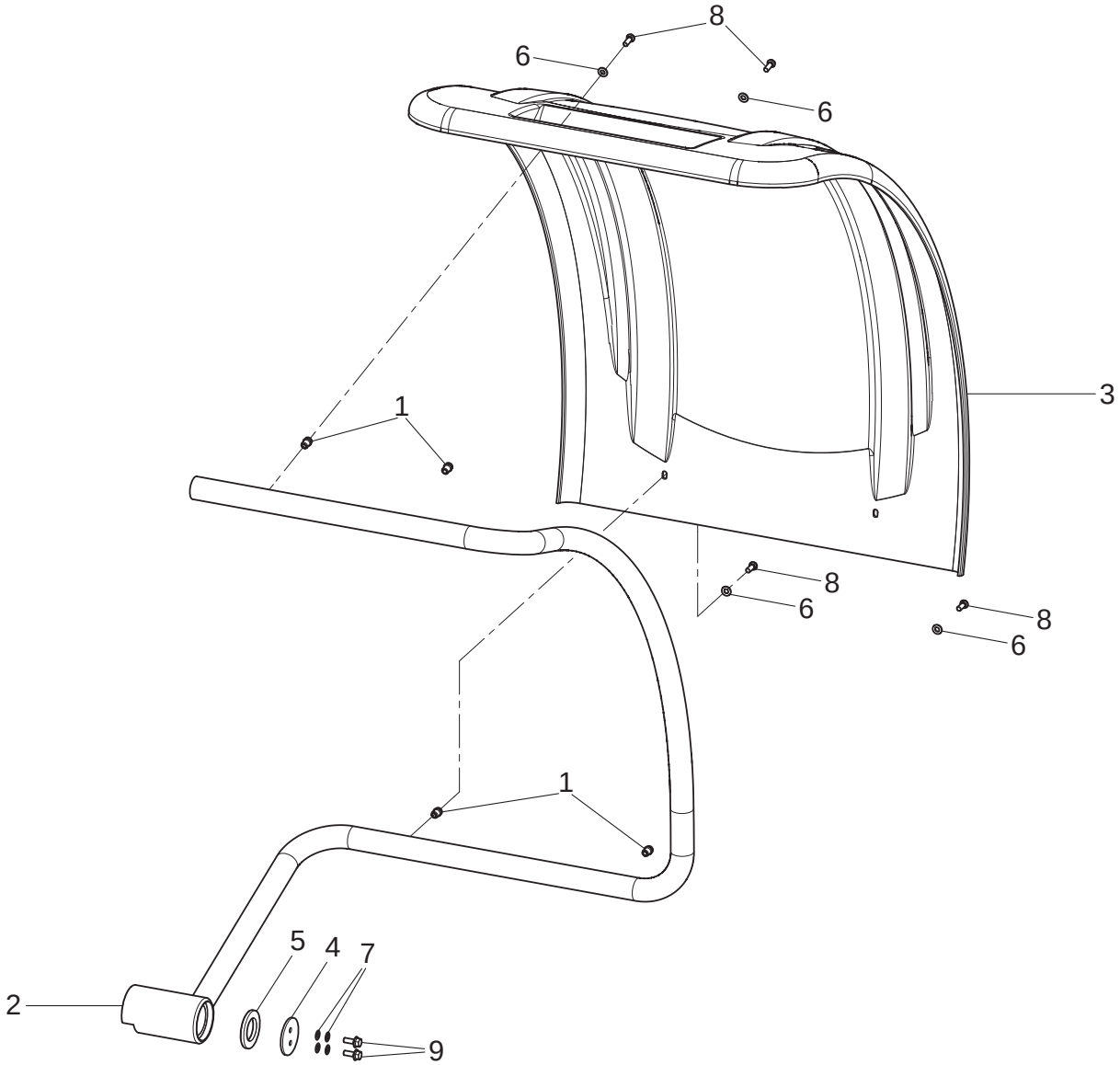

LIBRAK355	LIBRAK355P	LIBRAK355S	LIBRAK355PS
●	●	●	●

Butler ENGINEERING and MARKETING S.P.A.	LISTA DEI COMPONENTI - LIST OF COMPONENTS - TEILELISTE LISTE DES PIECES DETACHEES - LISTA DE PIEZAS	GRUPPO PROTEZIONE RUOTA WHEEL PROTECTION UNIT SATZ FÜR RADSCHUTZ GROUPE PROTECTION ROUE GRUPO PROTECCIÓN RUEDA	Pag. 18 di 25
	Tavola N°13 - Rev. 0 / 129791580		

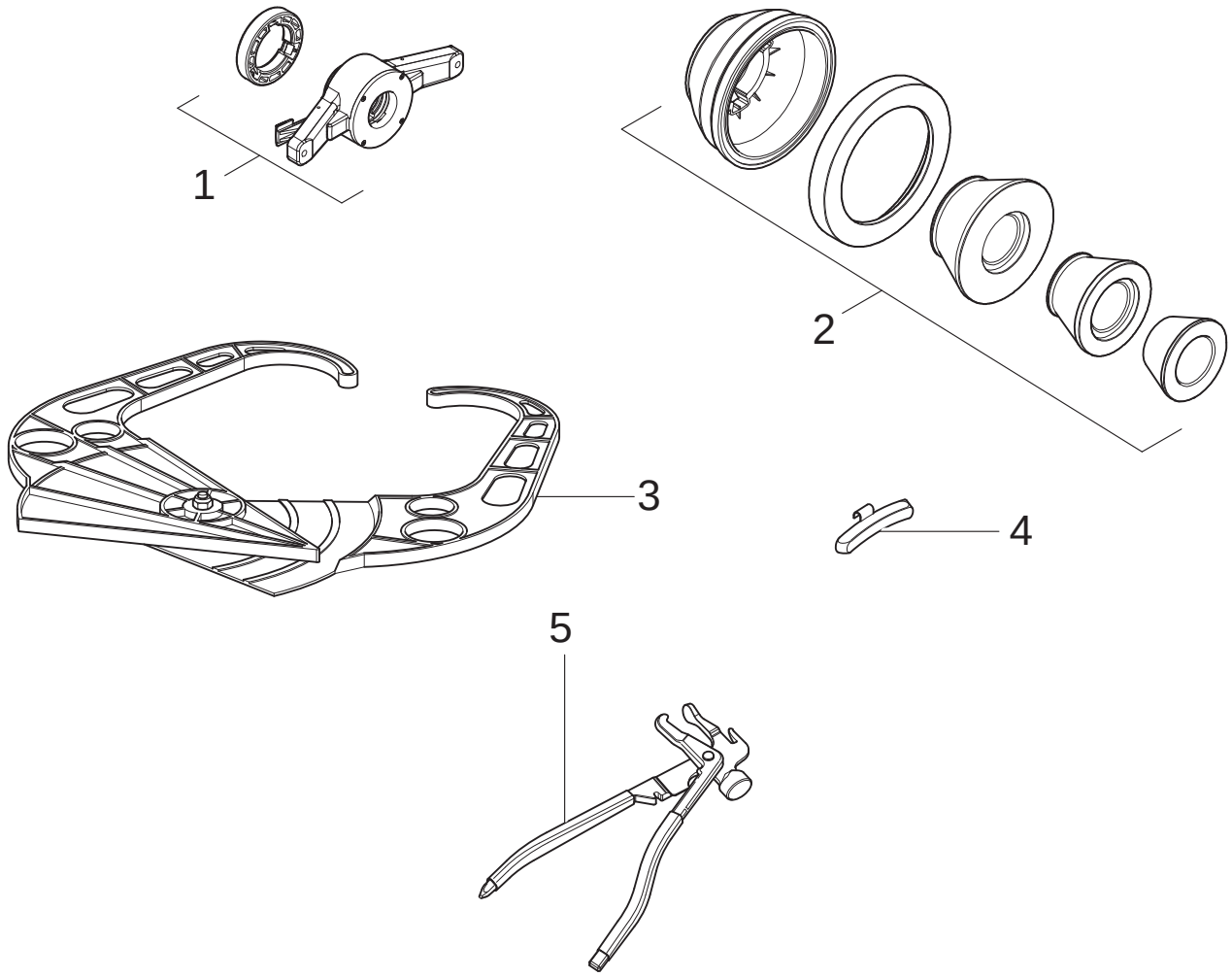

LIBRAK355	LIBRAK355P	LIBRAK355S	LIBRAK355PS
•			

Butler ENGINEERING and MARKETING S.P.A.	LISTA DEI COMPONENTI - LIST OF COMPONENTS - TEILELISTE LISTE DES PIECES DETACHEES - LISTA DE PIEZAS	DOTAZIONE A A EQUIPMENT AUSSTATTUNG A DOTATION A DOTACION A	Pag. 19 di 25
	Tavola N°14A - Rev. 0		

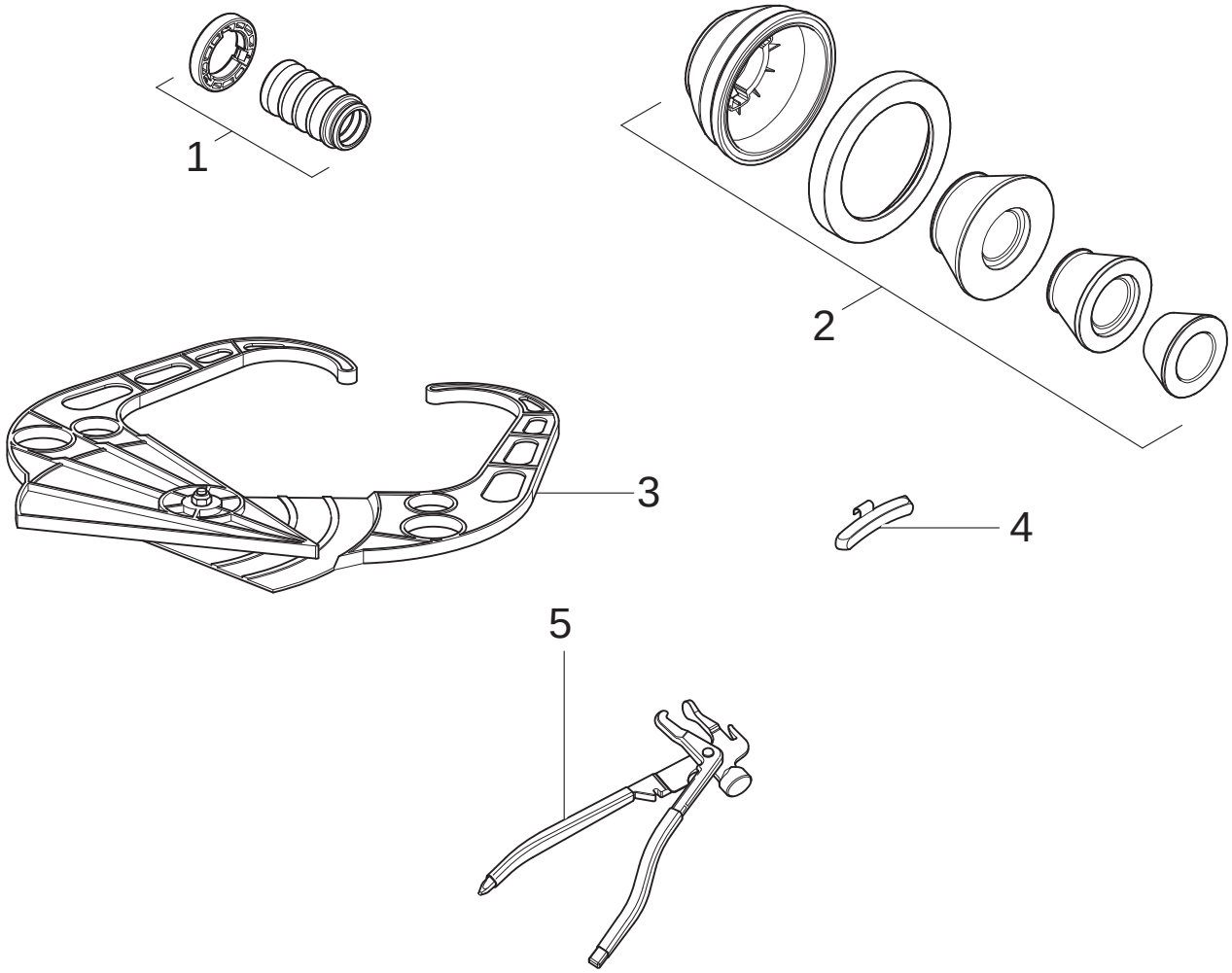

LIBRAK355	LIBRAK355P	LIBRAK355S	LIBRAK355PS
	•		

Butler ENGINEERING and MARKETING S.P.A.	LISTA DEI COMPONENTI - LIST OF COMPONENTS - TEILELISTE LISTE DES PIECES DETACHEES - LISTA DE PIEZAS	DOTAZIONE B B EQUIPMENT AUSSTATTUNG B DOTATION B DOTACION B	Pag. 20 di 25
	Tavola N°14B - Rev. 0		

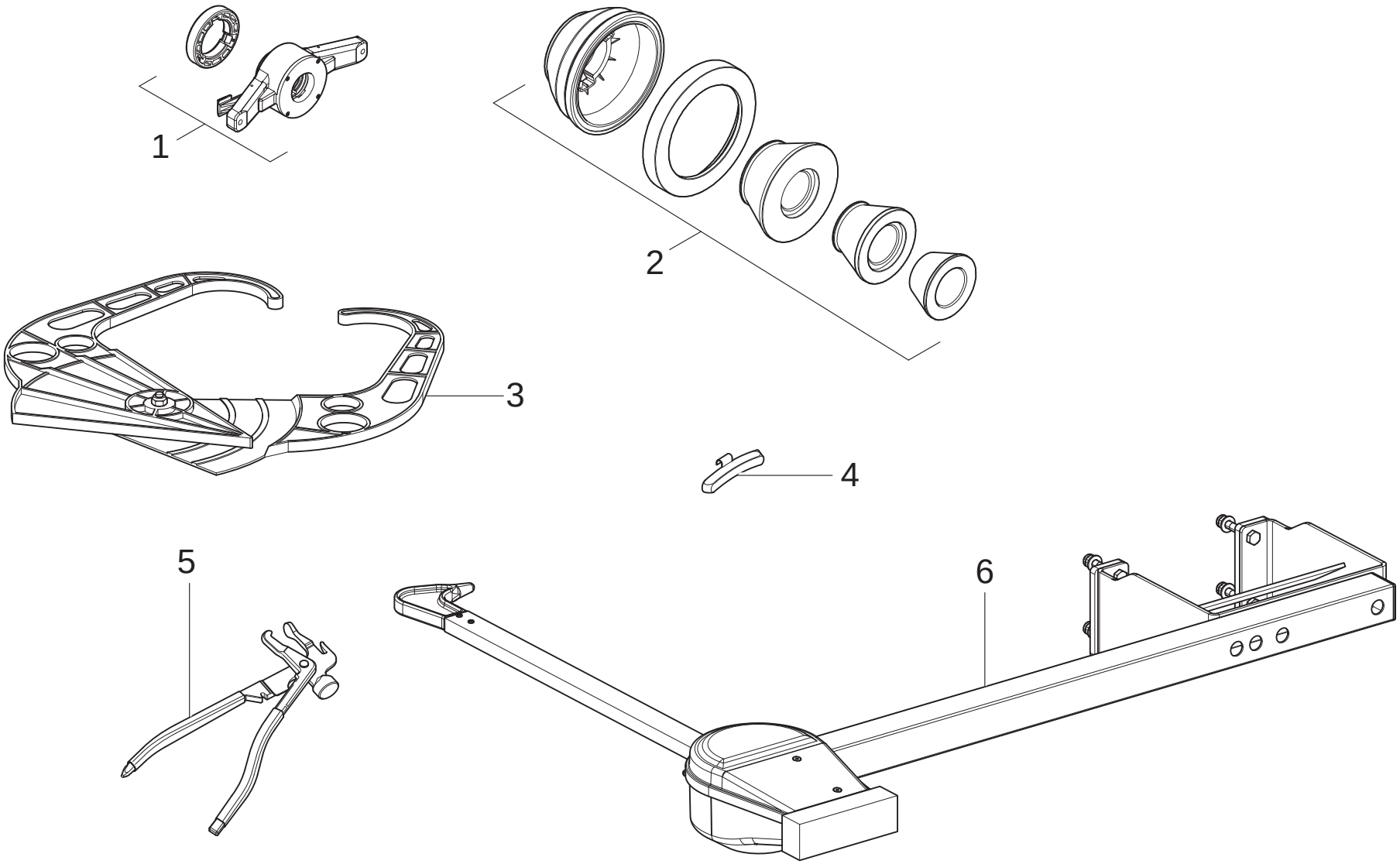

LIBRAK355	LIBRAK355P	LIBRAK355S	LIBRAK355PS
		•	

Butler ENGINEERING and MARKETING S.P.A.	LISTA DEI COMPONENTI - LIST OF COMPONENTS - TEILELISTE LISTE DES PIECES DETACHEES - LISTA DE PIEZAS	DOTAZIONE C C EQUIPMENT AUSSTATTUNG C DOTATION C DOTACION C	Pag. 21 di 25
	Tavola N°14C - Rev. 0		

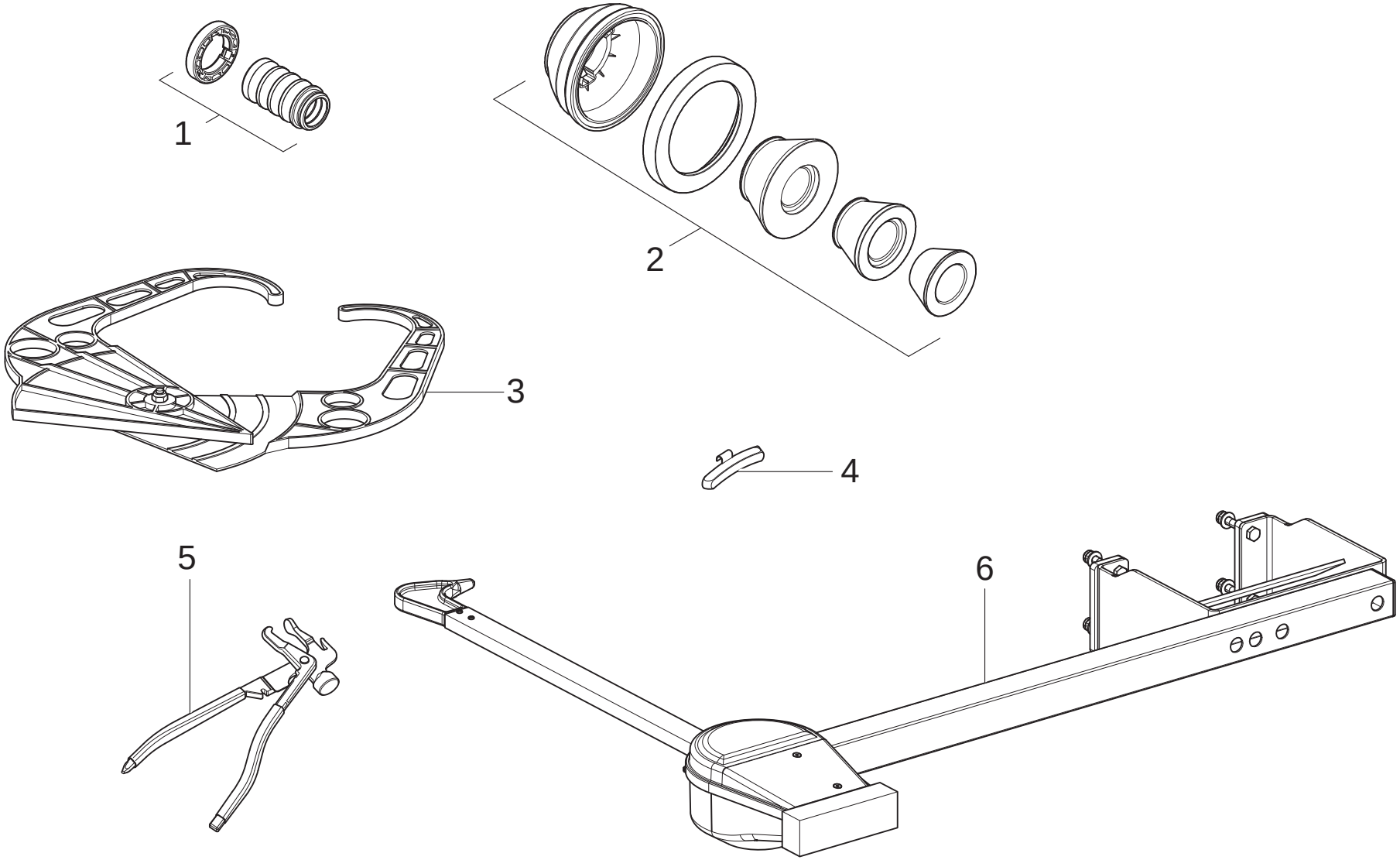

LIBRAK355	LIBRAK355P	LIBRAK355S	LIBRAK355PS
			•

Butler ENGINEERING and MARKETING S.P.A.	**LISTA DEI COMPONENTI - LIST OF COMPONENTS - TEILELISTE** **LISTE DES PIECES DETACHEES - LISTA DE PIEZAS**	*DOTAZIONE D* *D EQUIPMENT* *AUSSTATTUNG D* *DOTATION D* *DOTACION D*	***Pag. 22 di 25***
	Tavola N°14D - Rev. 0		

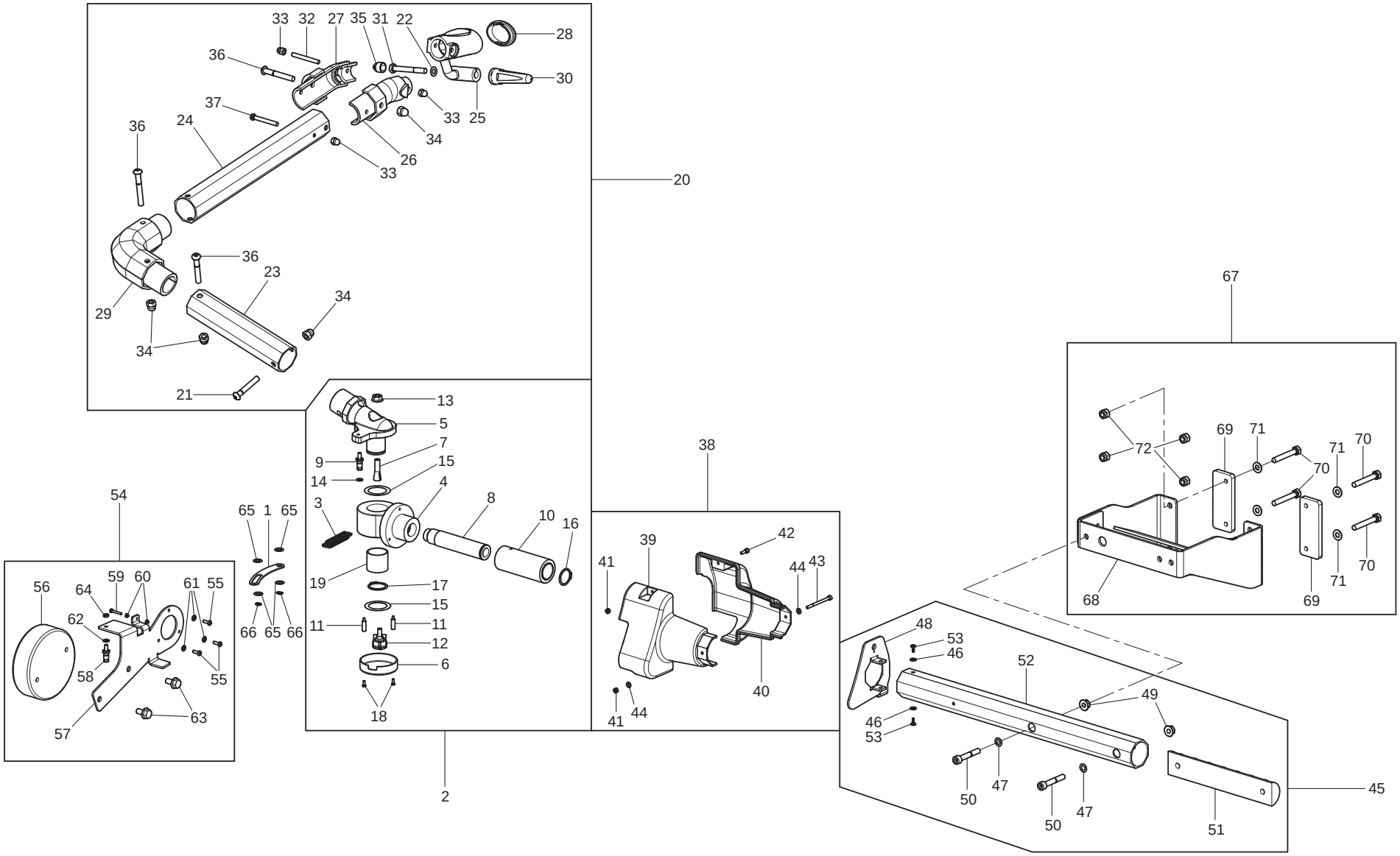

LIBRAK355	LIBRAK355P	LIBRAK355S	LIBRAK355PS
OPT	OPT	OPT	OPT

Butler ENGINEERING and MARKETING S.P.A.

LISTA DEI COMPONENTI - LIST OF COMPONENTS - TEILELISTE
LISTE DES PIECES DETACHEES - LISTA DE PIEZAS

Tavola N°15 - Rev. 0 | **129791550**

CALIBRO LARGHEZZA PROFESSIONALE
PROFESSIONAL EXTERNAL DATA GAUGE
BERUFLICHE BREITENLEHRE
CALIBRE LARGEUR PROFESSIONEL
CALIBRE ANCHO PROFESIONAL

1297-R008-0_B

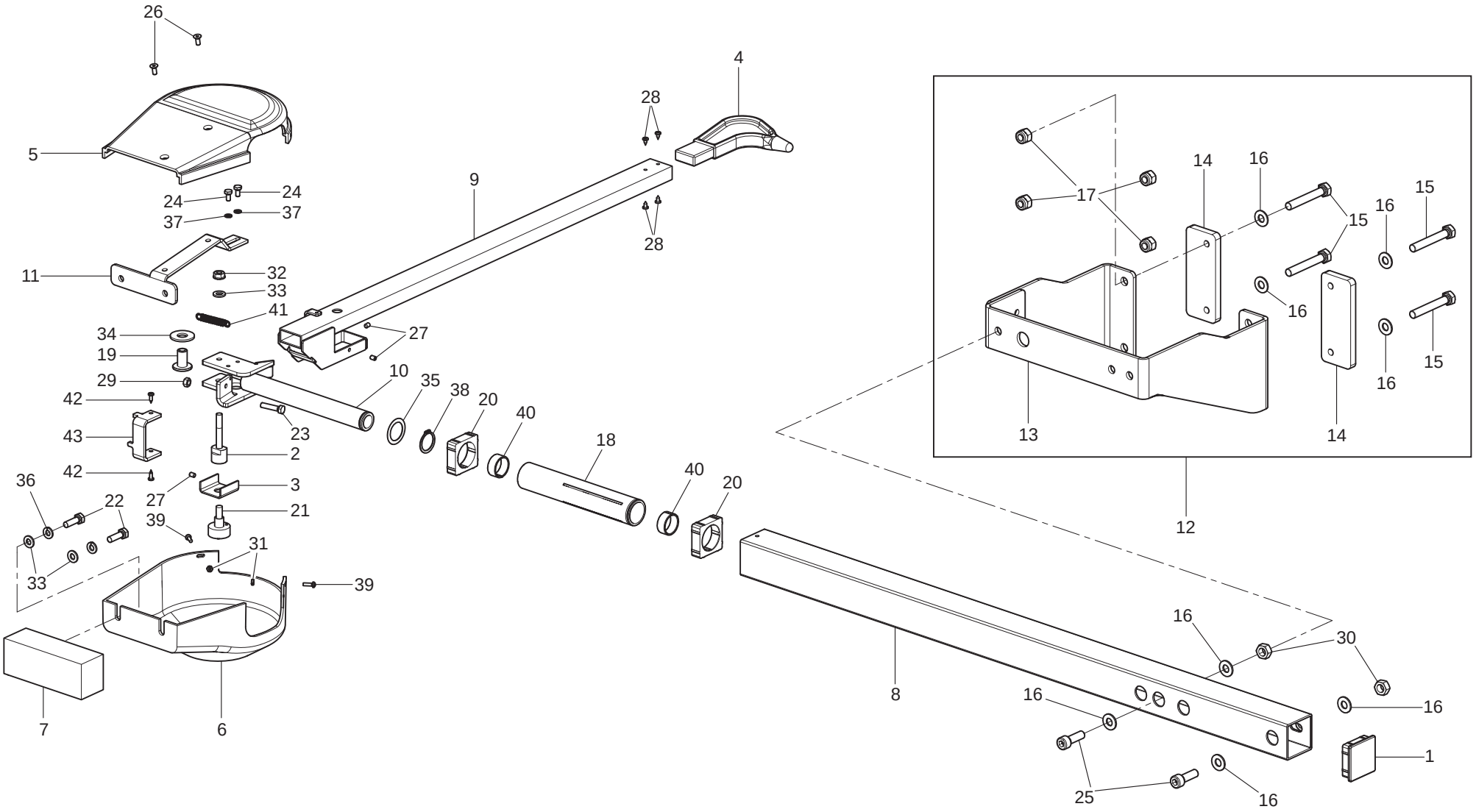

LIBRAK355	LIBRAK355P	LIBRAK355S	LIBRAK355PS
OPT	OPT	●	●

Butler ENGINEERING and MARKETING S.P.A.

LISTA DEI COMPONENTI - LIST OF COMPONENTS - TEILELISTE
LISTE DES PIECES DETACHEES - LISTA DE PIEZAS

Tavola N°16 - Rev. 0 | **129590720**

CALIBRO LARGHEZZA
WIDTH CALIPER
KALIBER FÜR BREITE
CALIBRE LARGEUR
CALIBRE ANCHO

1297-R008-0_B

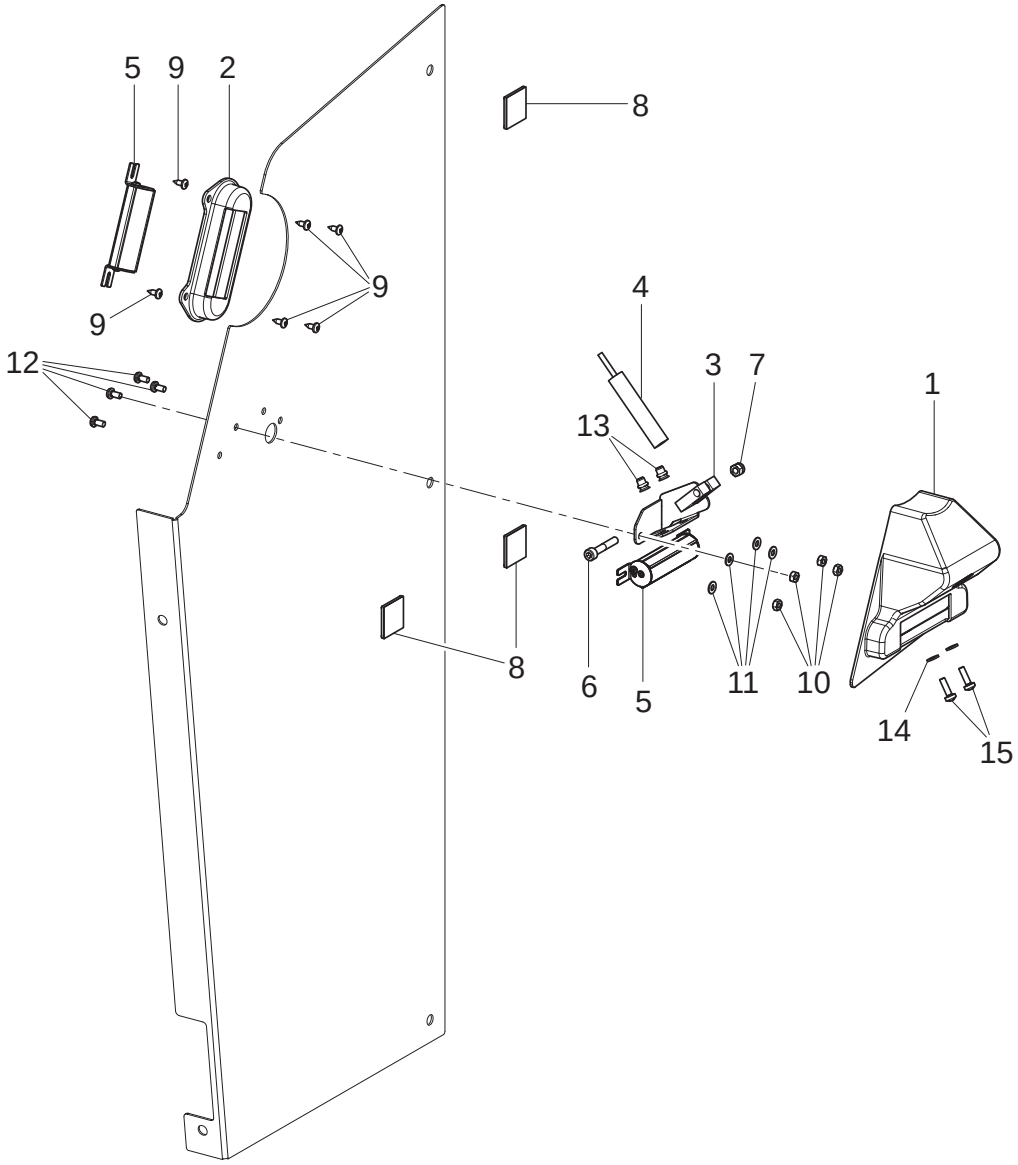

LIBRAK355	LIBRAK355P	LIBRAK355S	LIBRAK355PS
		●	●

Butler ENGINEERING and MARKETING S.P.A.	**LISTA DEI COMPONENTI - LIST OF COMPONENTS - TEILELISTE** **LISTE DES PIECES DETACHEES - LISTA DE PIEZAS**	*GRUPPO LASER FISSO + ILLUMINATORE* *FIXED LASER + LIGHTING DEVICE UNIT* *FESTLASER + BELEUCHTUNG SATZ* *GROUPE LASER FIXE + DISPOSITIF D'ÉCLAIRAGE* *GRUPO LASER FIJO + ILUMINADOR*	***Pag. 25 di 25***
	Tavola N°17 - Rev. 0 / **129790110**		